SpinPro® 8 R performance data sheet



Additional features

- 7-inch touch screen
- Connection via USB and Ethernet
- LIMS, ELN and VisioNize® Lab Suite integration options
- User management
- Selectable audit-safe mode to support CFR21 part 11 compliance

Technical specifications

Maximum speed	
Max. RCF	
Fixed angle rotors	58,700 × *g*
Swing-bucket rotor	28,700 × *g*
Max. rotational speed	22,000 rpm
Max. capacity	4 × 1,500 mL / 6 × 1,000 mL
Max. power consumption	4,200 W / ≤ 4.6 kVA
Idle power consumption	32 W
Noise level	< 65 dB(A)
Temperature range	-20 °C – 40 °C
Power Supply (type)	200 V-240 V, 50Hz/60Hz

Dimensions

W × D × H	700 × 810 × 908 mm
Height with open lid	1,500 mm
Footprint	
Base plate	700 × 591 mm
Foot spacing	670 × 473 mm
Weight*	265 kg
Shipping weight	310 kg

*w/o rotors and accessories

Key features

Sustainability

- Refrigerant (R744 = CO_2) with low global warming potential
- Energy safe mode, Standby function and aerodynamic bucket design for reduced energy consumption

Rotor Selection

- 30 different rotors available
- 20 different standard fixed-angle rotors with speeds up to 58,700 × *g* (Rotor R27A)
- 4 different sealed fixed-angle rotors for special applications
- 6 swing-bucket and one horizontal rotor allowing easy handling of plates and enhanced flexibility

Materials of construction and refrigerant

Housing	Galvanized steel painting coating
Font part	Galvanized steel painting coating
Outer lid	Acrylnitril Butadien Styrol (ABS)
Rotor bowl	Stainless steel
Fixed-angle rotors	Aluminum
Swing-bucket rotor	Aluminum / Stainless steel
Refrigerant	R744 (850 g)

Certifications and registration

Company

- ISO 9001
- ISO 14001
- ISO 13485

Centrifuge

- CE Certificate (incl. all relevant directives and safety standards)
- ACT® label in prep
- Certificate of containment testing for aerosol-tight rotors

Technical specifications are subject to change. Errors and omissions excepted.

Maximum capacity for different vessels

Bottles	
1,500 mL Eppendorf bottles	4
1 L Superspeed Nalgene bottles	6
750 mL Eppendorf bottles	4
Corning® 500 mL conical bottle	4
500 mL flat bottles	6
250 mL flat bottles	4
175 – 225 mL conical bottles	4
100 mL flat bottles	10

Tubes	
80 mL round bottom tube	6
50 mL Conical tubes (aerosol-tight)	28
50 mL Conical tubes, skirted	20
25 mL Conical tubes (screw cap / snap cap)	28/24
15 mL Conical tubes	56
11 mL Thick-walled tubes	16
5 mL Conical tubes	56
1.5/2.0 mL Micro tubes	200

Plates	
MTP plates	16
DWP plates	4

Blood collection tubes	
Ø 13 mm	92
Ø 16 mm	80
Ø 17.5 mm	80

Dimensions

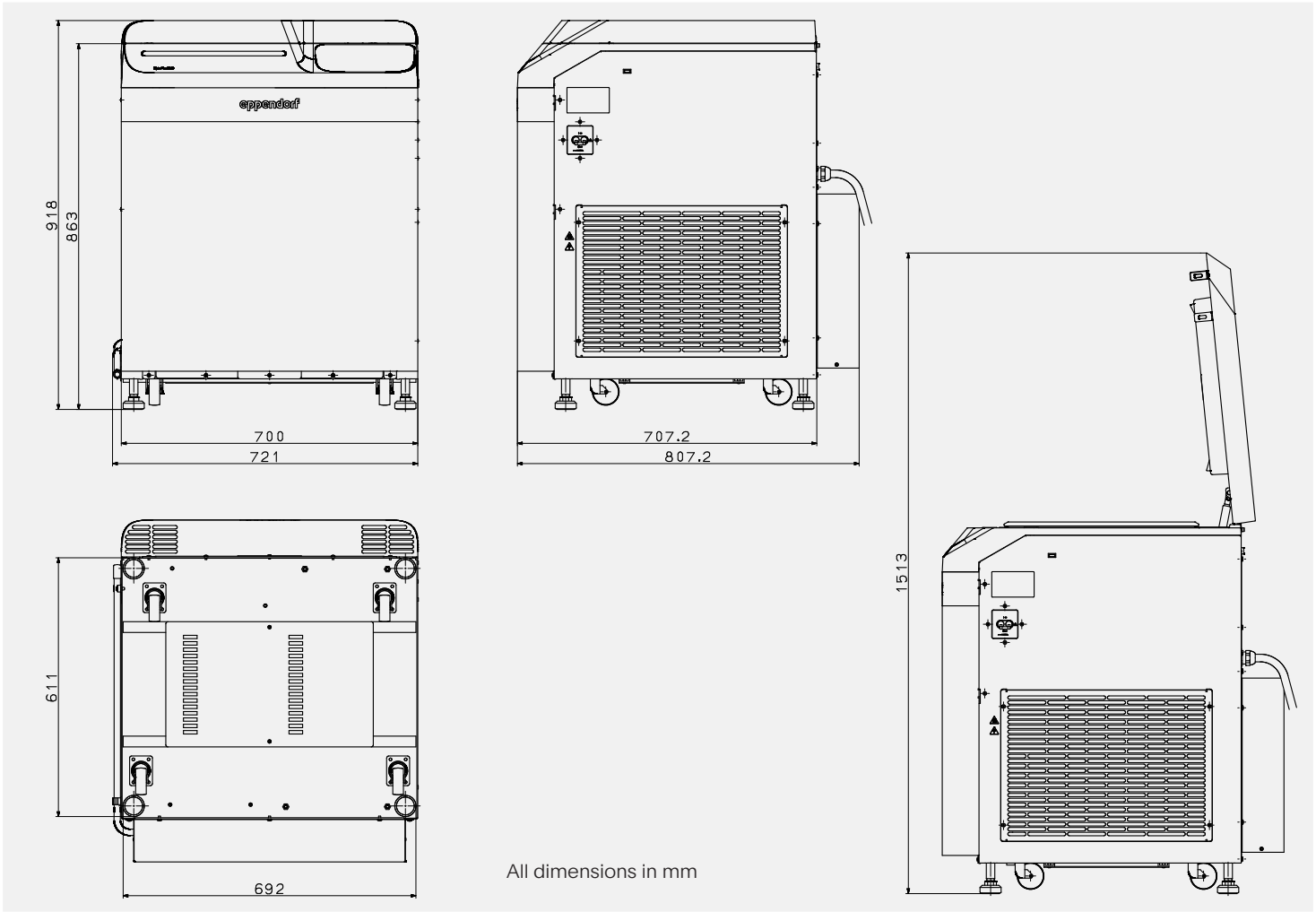

All dimensions in mm

Technical specifications are subject to change. Errors and omissions excepted.

Your local distributor: www.eppendorf.com/contact
Eppendorf SE · 22339 Hamburg · Germany
eppendorf@eppendorf.com · www.eppendorf.com

For more information, visit

www.eppendorf.link/spinpro8r-centrifuge

www.eppendorf.com

ACT® is a registered trademark of My Green Lab, USA. Corning® is a registered trademark of corning Inc., USA.

Eppendorf®, the Eppendorf Brand Design, SpinPro® and VisioNize® are registered trademarks of Eppendorf SE, Germany.
All rights reserved, including graphics and photos. Copyright © 2026 by Eppendorf SE. EN2/1026/HQ