eppendorf

Register your instrument!
www.eppendorf.com/myeppendorf



Centrifuge

SpinPro 8 R

Operating Manual

Copyright © 2026 Eppendorf SE, Germany. All rights reserved, including graphics and images. No part of this publication may be reproduced without the prior permission of the copyright owner.

Eppendorf® and the Eppendorf Brand Design are registered trademarks of Eppendorf SE, Germany.

Eppendorf trademarks and trademarks of third parties may appear in this manual. All trademarks are the property of their respective owners. The respective trademark name, representations and listed owners can be found on www.eppendorf.com/ip.

The software included in this product contains copyrighted software that is licensed under the GPL. A copy of that license is included in the settings of the device. You may obtain the complete corresponding source code from us for a period of three years after our last shipment of this product. Please direct your request to eppendorf@eppendorf.com.

U.S. Patents and U.S. Design Patents are listed on www.eppendorf.com/ip.

5721 230 001-01/2026-10

Table of contents

1 About this manual **7**
1.1 Version overview 7
1.2 Notes on this manual 7
1.3 Warning notice structure 7
1.4 Graphics 8
1.5 Other applicable documents 8
1.6 Certificates 8

2 Safety **9**
2.1 Intended use 9
2.2 Residual risks when used as intended 9
2.2.1 Personal injury 9
2.2.2 Material damage 11
2.3 Application limits 13
2.4 Target groups 13
2.5 Information for the owner 13
2.6 Personal protective equipment 14
2.7 Information on product liability 14
2.8 Information on the device 14

3 Product description **16**
3.1 Features 16
3.2 Product overview 17
3.3 Product components 17
3.4 Control panel 18
3.4.1 Home screen 18
3.4.2 Main menu 19
3.4.3 Operating controls 19
3.4.4 Symbols 20
3.5 Name plate 22
3.6 Required accessories 24
3.6.1 Fixed-angle rotors 24
3.6.2 Swing-bucket rotors 24

4 Functional description **25**
4.1 Centrifugation runs 25
4.2 Temperature control 25
4.3 VisioNize Lab Suite 25
4.4 Communication with external devices 25
4.5 Rotor detection 25
4.6 Rotor duty cycles 26
4.7 Overview of basic functions 26

5 Installation **29**
5.1 Checking connection requirements 29
5.2 Checking the location 29
5.3 Checking the delivery and packing 31
5.4 Checking the delivery condition 31

5.5 Checking the delivery package. . . . 31
5.6 Switching on the device. . . . 32
5.7 Leveling the device. . . . 32
5.8 Protecting the device against cyber attacks and data loss. . . . 33
5.9 Establishing a network connection. . . . 33
5.9.1 Connecting the device to a network. . . . 33

6 User management. . . . 35
6.1 User management concept. . . . 35
6.2 Roles and rights. . . . 35
6.3 Editing user management. . . . 38
6.4 Restoring user management. . . . 38
6.5 Exporting user management. . . . 38
6.6 Importing user management. . . . 39
6.7 Adding a user account. . . . 39
6.8 Editing a user account. . . . 40
6.9 Deleting a user account. . . . 40
6.10 Logging in as a user via touch screen. . . . 40
6.11 Changing the password. . . . 41
6.12 Logging out as a user. . . . 41

7 Preparing the device for use. . . . 42
7.1 Selecting the rotor and accessories. . . . 42
7.2 Opening the device lid. . . . 42
7.3 Closing the device lid. . . . 42
7.4 Replacing the rotor. . . . 43
7.4.1 Removing the rotor. . . . 43
7.4.2 Transporting the rotor. . . . 43
7.4.3 Inserting the rotor. . . . 43
7.5 Triggering rotor detection. . . . 43
7.6 Tempering the rotor chamber. . . . 44
7.7 Preparing accessories and consumables. . . . 44

8 Operation. . . . 46
8.1 Performing centrifugation. . . . 46
8.1.1 Performing centrifugation with a time setting. . . . 46
8.1.2 Performing centrifugation without a time setting. . . . 47
8.1.3 Switching off the device. . . . 48
8.2 Advanced settings. . . . 48
8.2.1 Entering and accessing device information. . . . 48
8.2.2 Configuring the network. . . . 49
8.2.3 Setting the date and time. . . . 49
8.2.4 Setting the language. . . . 50
8.2.5 Activating audit-safe operation. . . . 50
8.2.6 Setting standby mode. . . . 50
8.2.7 Changing display settings. . . . 51
8.2.8 Adjusting the signal tone. . . . 52
8.2.9 Checking the device health. . . . 53
8.2.10 Managing data. . . . 53

8.2.11 Creating a program. . . . 54
8.2.12 Creating a multi-step program. . . . 54
8.2.13 Accessing a program. . . . 55
8.2.14 Setting favorites. . . . 55
8.2.15 Accessing events. . . . 55
8.2.16 Run Records. . . . 55
8.2.17 Accessing data storage. . . . 56
8.2.18 Exporting data. . . . 56
8.2.19 Exporting certificates. . . . 56

9 Maintenance. . . . 57
9.1 Maintenance plan. . . . 57
9.2 Maintenance. . . . 57
9.2.1 Emptying the drain tubing. . . . 57
9.2.2 Checking the device. . . . 58
9.2.3 Checking the rotor and accessories. . . . 58
9.2.4 Retrieving rotor duty cycles. . . . 58
9.2.5 Replacing the sealing ring on caps. . . . 58
9.2.6 Software update. . . . 59
9.3 Cleaning. . . . 59
9.3.1 Cleaning the device after glass breakage. . . . 59
9.3.2 Cleaning a fixed-angle rotor after vessel breakage. . . . 60
9.3.3 Cleaning accessories. . . . 61
9.3.4 Cleaning the touch screen. . . . 61
9.4 Decontamination. . . . 61
9.4.1 Decontaminating the device. . . . 62
9.5 Care instructions. . . . 62

10 Troubleshooting. . . . 63
10.1 General errors. . . . 63
10.2 Message concept. . . . 64
10.3 Viewing a message. . . . 65
10.4 Snoozing a message signal tone. . . . 65
10.5 Stopping the signal tone of a message. . . . 65
10.6 Confirming a message. . . . 66
10.7 Reacting to cyber attacks. . . . 66
10.8 Emergency release of the device lid. . . . 66
10.9 Troubleshooting technical errors. . . . 68
10.10 Accessing service information. . . . 68

11 Shut down. . . . 69
11.1 Disconnecting the device from the power supply. . . . 69

12 Transport. . . . 70
12.1 Preparing the device for transport. . . . 70
12.2 Transporting the device. . . . 70
12.3 Sending in the device. . . . 70

13 Storage **72**
13.1 Storing the device 72
13.2 Storing accessories 72

14 Disposal **73**
14.1 Legal regulations 73
14.2 Preparing for disposal 74
14.3 Handing over the product to the waste disposal company 75

15 Technical data **76**
15.1 Dimensions 76
15.2 Weight 76
15.3 Power supply 76
15.4 Refrigeration system 77
15.5 Ambient conditions 77
15.6 Interfaces 78
15.7 Noise level 78
15.8 Temperature 78
15.9 Acceleration and deceleration times 78
15.10 Application parameters 79

16 Suitable rotors **80**
16.1 Overview of suitable rotors 80

17 Chemical resistance **81**
17.1 Evaluation criteria for chemical resistance 81
17.2 Chemical resistance of the faceplate 81
17.3 Chemical resistance of the centrifuge lid 84
17.4 Chemical resistance of the housing rubber mat 86
17.5 Chemical resistance of the upper part of housing 88

18 Glossary **90**

19 Index **92**

1 About this manual

1.1 Version overview

Version	Change	Content approval
00	• Document created	2026-08-25
01	• Technical data adjusted	2026-10-12

1.2 Notes on this manual

The current version of the manual can be found at www.eppendorf.com/manuals. To obtain a different version of the manual, contact Eppendorf SE.

1. Read this manual completely before using the product.
2. Make sure you have this manual available while using the product.

The dates in this manual correspond to the international date format as specified in the ISO 8601 standard. All dates are shown in the format YYYY-MM-DD or YYYY-MM.

This manual uses units of measurement and unit symbols in accordance with the International System of Units (SI) (see ISO 80000) and its derived and legally permissible units. For example, times are specified in hours [h], minutes [min], and seconds [s].

Eppendorf is strongly committed to equal treatment. To improve readability, we have chosen not to use gender-specific terms (m/f/d) in our manuals. All references to persons apply equally to all genders.

1.3 Warning notice structure

HAZARD LEVEL! Type of danger

Source of danger
Consequences of disregarding the danger

– Measures to avoid the danger

Symbol	Hazard level	Type of danger	Meaning
	DANGER	Personal injury	Will lead to severe injuries or death.
	WARNING	Personal injury	May lead to severe injuries or death.
	CAUTION	Personal injury	May lead to minor or moderate injuries.
	NOTICE	Material damage	May lead to material damage.

1.4 Graphics

Depiction	Meaning
1. 2.	Work steps
•	Bullet point
Text	Display text
Key	Name for port, button, status lamp, or key
	Important information
	Tip

1.5 Other applicable documents

The following documents supplement this manual:

- Instructions for use of rotors
- Pre-Installation Questionnaire

1.6 Certificates

Declarations of conformity, certificates, Safety Data Sheets etc. on the product can be found on the respective product page at www.eppendorf.com.

2 Safety

2.1 Intended use

The centrifuge is used for separating aqueous solutions and suspensions of different densities in approved sample tubes.

The centrifuge is intended for indoor use only. All country-specific safety requirements for operating electrical equipment in laboratories must be observed.

2.2 Residual risks when used as intended

If the product is not used as intended, the installed safety devices may not function correctly. To reduce the risk of personal injury and material damage and to avoid dangerous situations, please observe the general safety instructions.

2.2.1 Personal injury

2.2.1.1 Biological hazards

Pathogenic biological agents can harm your health and the environment.

- Observe national regulations and the biosafety level of your laboratory.
- Wear your personal protective equipment.
- Observe the Safety Data Sheets and instructions for use for the accessories.
- For information on handling germs or biological material of risk group II or higher, read the "Laboratory Biosafety Manual" (source: World Health Organization, Laboratory Biosafety Manual, in the current version).

2.2.1.2 Explosion hazards

The use of explosive substances or substances with violent reactions may cause explosions. Do not operate the device under the following conditions:

- In an explosive atmosphere
- In areas where work with explosive substances is carried out
- With explosive substances or substances with violent reactions
- With substances that may, combined with a reactant or without such reactant, form an explosive atmosphere

The use of explosive or highly reactive substances in the rotor can lead to fire or explosion.

- Do not use explosive or highly reactive substances.
- Do not use substances that can create an explosive atmosphere with or without a reactant.

2.2.1.3 Electrical hazards

If you touch parts that are under high voltage, you may receive an electric shock. A life-threatening electric shock causes cardiac arrhythmia, burns, and respiratory paralysis.

- Use only power sockets with a protective earth conductor.
- Ensure that a residual current circuit breaker is present and accessible.

- Ensure that the housing and the power cord are not damaged.
- Disconnect the device from the power line in the event of danger.
- Do not open or remove the housing.
- In North America, the power plug intended for this device must be connected by Eppendorf or an authorized service partner. In all other countries, select and connect the power plug in accordance with the local power supply and applicable national laws and regulations.
- If the device is to be permanently connected to the power supply without a power plug, use a certified power cord that meets the specifications below. Additionally, install a separate circuit breaker with the rated current specified below to serve as a disconnecting device.
  – Power cord: 600 V; AWG 10; STO 4.1 m (3.3 m of which is outside the device)
  – Circuit breaker: 30 A
- Ensure that the power plug and power socket are compatible and that the electrical protective earth conductors of the device and the building installation are securely connected.
- Clean and maintain the device only when it is disconnected from the power line.
- Have the device regularly inspected for electrical safety in accordance with national requirements.

If liquids come into contact with the electronics of the device, you may receive an electric shock. A life-threatening electric shock can cause cardiac arrhythmias, respiratory arrest, or severe burns.

- Switch off the device and disconnect it from the power line before you begin cleaning or disinfecting.
- Only connect the device to the power line when it is completely dry inside and out.

2.2.1.4 Mechanical hazards

If the rotor is subjected to vibrations during operation, the device may move unexpectedly. People can be seriously injured.

- Do not enter the 30 cm safety zone around the device during operation.
- Do not move the device during operation.
- Do not lean against the device.

The rotors can be slippery and heavy. A rotor may slip out of your hand and cause an injury.

- Transport the rotors using a transport aid.

2.2.1.5 Cryogenic burns

The temperature in the interior of the device is extremely low. Direct skin contact with interior surfaces or with stored items can cause cryogenic burns.

- Wear cold protection gloves when loading and unloading the device.

2.2.2 Material damage

2.2.2.1 General hazards

The use of accessories and spare parts other than those recommended by Eppendorf SE may impair the safety, functioning, and precision of the device. Eppendorf SE cannot be held liable or accept any liability for damage resulting from the use of accessories and spare parts other than those recommended.

- Only use the accessories and spare parts recommended by Eppendorf SE.
- Only use accessories and spare parts that are in perfect technical condition.

2.2.2.2 Chemical hazards

Aggressive chemicals as well as aggressive cleaning agents and disinfectants can damage the material of the device, rotor and accessories. This may cause damage to the interior of the device during operation.

- Protect all components from aggressive chemicals.
- Clean and disinfect all components only with recommended cleaning agents and disinfectants.
- Clean the rotor, device and accessories immediately if they come into contact with aggressive chemicals.
- Check all components for material changes before each use.
- Take a damaged device out of operation.
- Replace a damaged rotor.
- Replace damaged accessories.

When organic solvents (e. g., phenol or chloroform) are used, the strength of plastic vessels is reduced. The vessels may be damaged.

- Observe the manufacturer's information on the chemical resistance of the vessels.

2.2.2.3 Electrical hazards

Connecting the device to an incorrect power supply will damage the device.

- Connect the device only to a power supply that meets the requirements specified on the name plate.
- Use only power sockets with a protective earth conductor.
- In North America, the power plug intended for this device must be connected by Eppendorf or an authorized service partner. In all other countries, select and connect the power plug in accordance with the local power supply and applicable national laws and regulations.
- If the device is to be permanently connected to the power supply without a power plug, use a certified power cord that meets the specifications below. Additionally, install a separate circuit breaker with the rated current specified below to serve as a disconnecting device.
  - Power cord: 600 V; AWG 10; STO 4.1 m (3.3 m of which is outside the device)
  - Circuit breaker: 30 A
- Ensure that the power plug and power socket are compatible and that the electrical protective earth conductors of the device and the building installation are securely connected.

Condensate may form in the device due to transport of the device from a cool environment to a warmer environment and cause a short-circuit.

- Wait for at least 4 h after setting up the device. Connect the device to the power line after this.

2.2.2.4 Mechanical hazards

If the device is switched on when tilted or directly after tilting, the compressor and refrigeration system may become damaged.

- Leave the device to stand in its normal position for at least 4 h before switching it on.
- Do not place the device upside down.

A damaged rotor or damaged accessories can be destroyed when used in the device.

- Check the rotor and accessories for visible damage and material changes before each use.
- Use only undamaged rotors and accessories.
- Use rotors and accessories only within their service life.

A rotor striking the rotor bowl will cause significant damage to the device and the rotor.

- Do not move or bump the device during operation.

2.2.2.5 Incorrect handling

Improperly attached rotors can damage the device, rotor and vessels.

- Insert the rotor as described in this manual.
- If present, close the rotor lid and caps as described in this manual.
- Stop centrifugation immediately if there are any unusual noises.

High-energy radiation may lead to damage of the device.

- Do not use UV, beta or gamma rays, or any other high-energy forms of radiation for disinfection.
- Avoid storage in areas with strong UV radiation.

2.2.2.6 Sample loss

Incorrect handling of the buckets, vessels, and adapters can result in vessel breakage and sample loss.

- Observe the manufacturer's information on the vessels.
- Only use accessories suitable for the vessels in the rotor.
- Insert the vessels with adapters into the buckets.
- Remove the buckets before removing the rotor.
- Insert the rotor without buckets.

2.2.2.7 Information security

To minimize the risk of data theft and misuse, proceed as follows:

- Enable user management.
- Register only as many users as necessary.

- Create a separate account for each user.
- Keep your password secret.
- Operate the device only within an internal network or use a firewall.
- If you leave the device unattended, log off.
- When you are not using the device, switch it off.

2.3 Application limits

Due to its design, the product is not suitable for use in a potentially explosive atmosphere.

The product may only be used in a safe environment, such as a ventilated laboratory or under a fume hood. Substances which may potentially contribute to an explosive atmosphere may not be used.

2.4 Target groups

This manual is intended for the following target groups, who have different qualifications and levels of knowledge.

Owner

The owner is any natural or legal person who operates or owns the device.

The owner provides the product and the necessary infrastructure. The owner has a special responsibility to ensure the safety of all persons working on the product.

User

The user operates the product and works with it. The user must be instructed in the use of the product. The user must have read and fully understood the manual.

Any tasks that go beyond operation may only be performed by the user if this is specified in this manual. The owner must explicitly assign these tasks to the user.

Technical personnel

The technical personnel supervises the building services and ensures the technical prerequisites for the operation of the product.

Authorized service technician

The authorized service technician is trained and certified by Eppendorf SE to service, maintain and repair the product.

2.5 Information for the owner

The owner must ensure the following:

- The product is in a safe operating condition.
- The safety devices are all available and functional.
- The product is serviced and cleaned according to the information in this manual.
- The product is disposed of in accordance with local regulations.
- All work on the product is carried out by users, technical personnel, or authorized service technicians who are suitably qualified.

- Personal protective equipment is available and is worn.
- The manual is available during the use of the product.
- The manual is part of the product. Use the following link to download the current version of the manual: https://www.eppendorf.link/documents. For a printed or older version of the manual for your product, please contact your Eppendorf partner.

2.6 Personal protective equipment

Personal protective equipment serves to ensure the safety and protection of the user when working with the product.

Personal protective equipment must comply with country-specific regulations and the regulations of the laboratory.

Cut-resistant gloves

The gloves provide protection against sharp-edged parts and splinters.

Laboratory gloves

The gloves provide protection against infectious liquids and pathogenic germs.

Laboratory protective clothing

The clothing protects against contamination and infection when working with pathogenic agents.

Safety shoes

The shoes protect the wearer against injury from heavy loads and improve grip on slippery floors.

2.7 Information on product liability

The owner of the device will be held liable for personal and material damage in the following cases:

- The device is used outside of its intended use
- The device is not used in accordance with the operating manual
- Manipulation of safety devices
- The device has spare parts installed that are not authorized by Eppendorf SE
- The device is used with accessories or consumables that are not recommended by Eppendorf SE
- Cleaning agents are used that are not recommended by Eppendorf SE
- Chemicals are used that are not recommended by Eppendorf SE
- Shipment not in original packing or in improper substitute packing
- The device is maintained or repaired by persons not authorized by Eppendorf SE
- Unauthorized modifications

2.8 Information on the device

Information on the device

Display	Meaning	Location
	Observe the safety-relevant information in the operating manual.	Right side of the device

Display	Meaning	Location
	WARNING Hands or fingers can be injured by pointed or sharp objects, such as the lid latch hooks or ventilation gaps.	Under the centrifuge lid, near the ventilation gaps
	WARNING You can injure your hands when closing the centrifuge lid.	Front of the device
	WARNING Handling infectious liquids or pathogenic germs can harm your health.	Upper side of the device, under the centrifuge lid
	WARNING Risk of cryogenic burns	Upper side of the device, under the centrifuge lid
	WARNING You can burn yourself by touching hot surfaces, such as the fan grille.	Right side of the device
	WARNING Risk of electric shock	Rear of the device, front panel
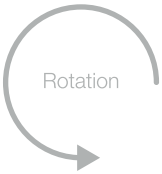	Direction of rotor rotation	Upper side of the device, under the centrifuge lid

3 Product description

3.1 Features

The device has the following specific features:

- Cooling function
- Touch screen
- Status light bar
- Interfaces: USB and Ethernet
- Optional connection to VisioNize Lab Suite
- User management
- Compatible with various rotors

The following consumables can be used with the device:

- Reaction vessels (0.2 mL – 5.0 mL)
- Microtainers
- Spin columns
- Conical vessels (15 mL and 50 mL)
- Cryogenic vessels
- Bottles (175 mL to 1500 mL)
- Microplates
- PCR plates
- Deepwell plates
- Slides with CombiSlide adapter
- Blood collection vessels

3.2 Product overview

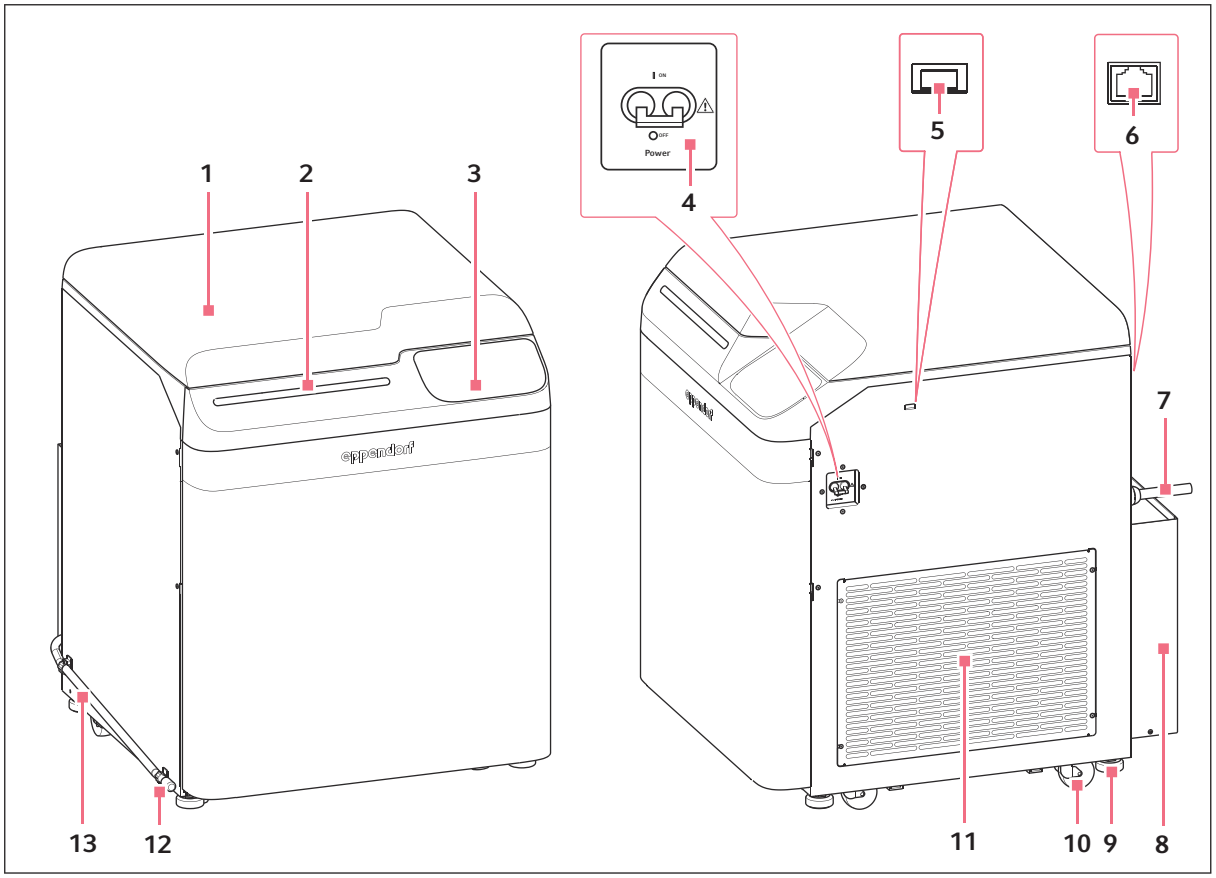

Fig. 3-1: Front and side views of the device

1 Centrifuge lid
2 Status light bar
3 Control panel
4 On/off power switch
5 USB interface
6 Ethernet port
7 Power cord
8 Airflow cover
9 Device foot
10 Heavy-duty castor
11 Ventilation gaps
12 Tube fastener and tube-closing cap from drain tubing
13 Drain tubing

3.3 Product components

Emergency release

The emergency release allows you to open the centrifuge lid if it cannot be opened using the *Open* button. Further information can be found in the Troubleshooting chapter.

Status light bar

The status light bar indicates the current device health. It reflects the colors displayed on the touch screen. It can also indicate warnings or messages unrelated to the centrifugation run.

Color	Meaning
White	The device is ready for use.
Blue	A centrifugation run is in progress.
Green	The device has completed the current process.
Yellow	A warning has occurred.
Red	An error has occurred.
Violet	The timer is active.

3.4 Control panel

3.4.1 Home screen

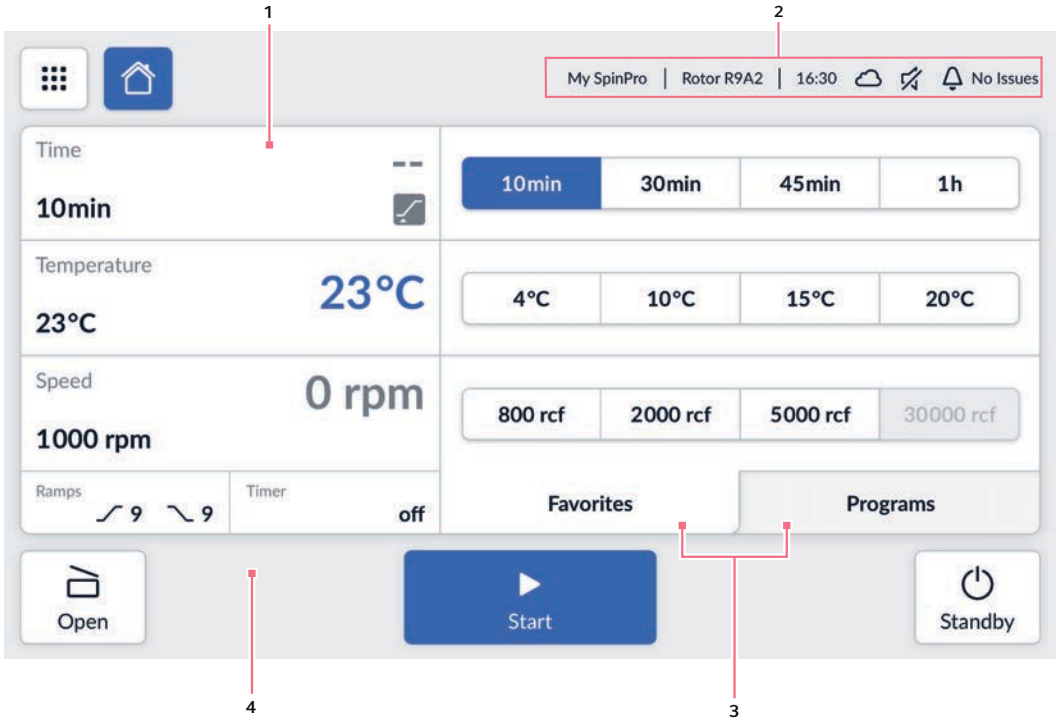

Fig. 3-2: Home screen of SpinPro 8 R

1 Current device health information
2 Status bar
3 Favorites / programs
4 Action bar

3.4.2 Main menu

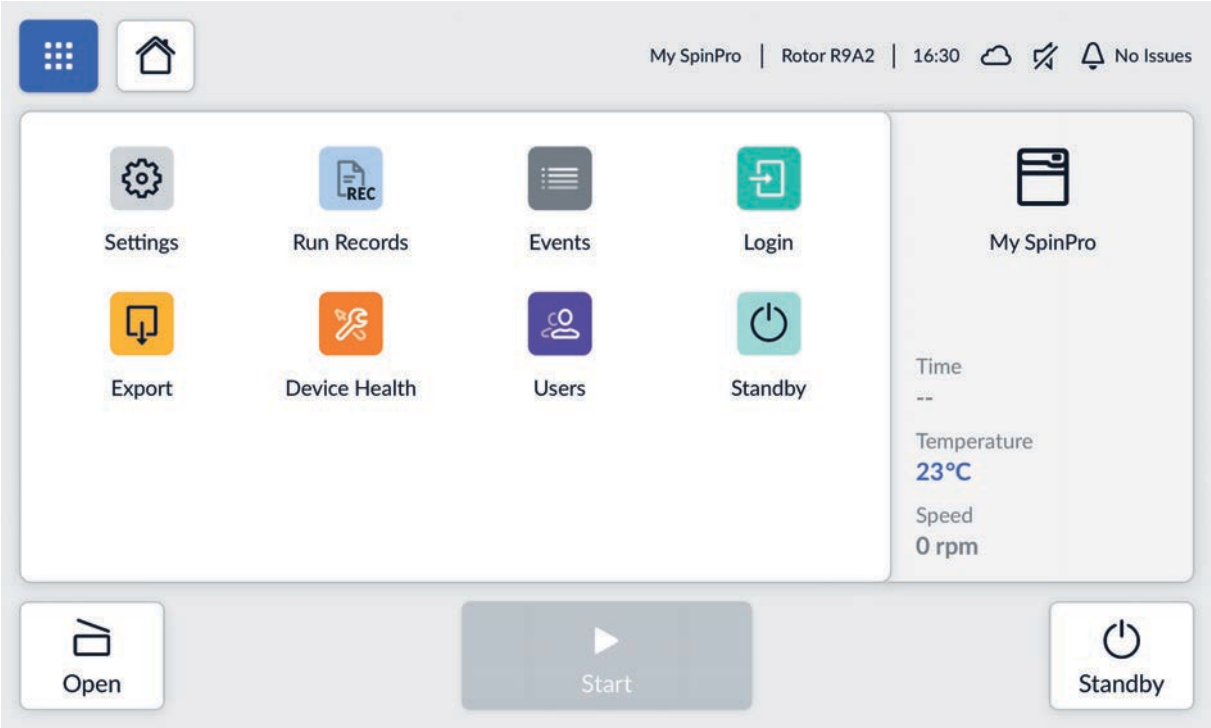

Fig. 3-3: Main menu of SpinPro 8 R

3.4.3 Operating controls

Operating control	Function
	Function enabled
	Function disabled
	Enter value
	Checkbox enabled
	Checkbox disabled
	Navigation arrows

3.4.4 Symbols

Table 3-1: Main menu

Symbol	Description
	Main menu
	Home screen
	Log in user
	Log out user
	User
	Settings
	Events
	Device status / shelf life
	Export
	Import
	Centrifugation run records
	Lid
	Standby

Table 3-2: Dialog window

Symbol	Description
	Edit
	Filter

Symbol	Description
	Active filter
	Export
	Confirm
	Invalid input indicator

Table 3-3: Status bar and notification bar

Symbol	Description
	Active message
	Snoozed message
	Paused message
	No messages
	Cloud connected
	Cloud disabled
	No cloud connection
	Lid open
	Audible notifications disabled

3.5 Name plate

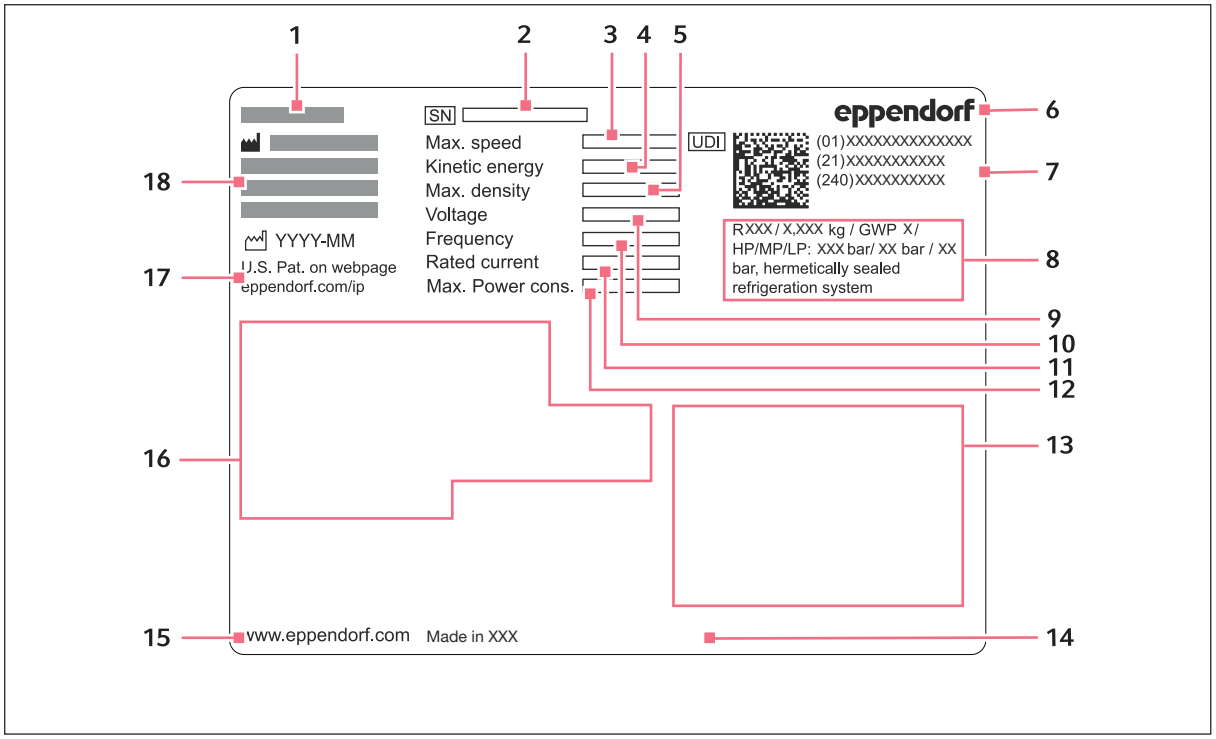

Fig. 3-4: Device identification for Eppendorf SE (example)

1 Product name
2 Serial number
3 Maximum speed
4 Maximum kinetic energy
5 Maximum density of material for centrifuging
6 Manufacturer
7 UDI code
8 Information on refrigerant/refrigeration system
9 Rated voltage
10 Rated frequency
11 Rated current
12 Maximum rated power
13 Additional device data
14 Place of development
15 Manufacturer's website
16 Device-specific certification marks and symbols
17 Patent information
18 Manufacturer's address

Certification and conformity marks and symbols (device-specific)

Symbol	Meaning
SN	Serial number

Symbol	Meaning
	Name and address of the manufacturer Eppendorf SE
	Date of manufacture
	Unique product identification mark
	Mark indicating conformity of waste electrical and electronic equipment with standard DIN EN 50419 in accordance with European Union Directive 2012/19/EU
	Certification mark indicating compliance with EU-wide safety, health, and environmental protection requirements
	Certification mark indicating testing of representative device samples by Underwriters Laboratories (UL) in accordance with US and Canadian safety standards
	Certification mark indicating testing of representative device samples by TÜV SÜD in accordance with US and Canadian safety standards
	Certification mark indicating testing by the Canadian Standards Association. The letters C and US indicate that the product is certified for the Canadian and US markets. The certification number refers to the manufacturer and the tested product.
	Electromagnetic compatibility mark in accordance with Federal Communications Commission (FCC, USA) regulations
	Certification mark indicating testing of representative device samples by the Korean Agency for Technology and Standards (KATS) in accordance with South Korean safety standards
	Mark indicating the environmentally friendly use period in accordance with People's Republic of China standard SJ/T 11364

Symbol	Meaning
	Mark indicating conformity with the standards of the relevant Australian telecommunications authority
	Mark indicating conformity with Eurasian Economic Union regulations
	Mark indicating conformity for the UK economic area
	Note to observe the printed instructions
	Note to observe the operating manual
	Note to observe the Original Operating Instructions
	Note to observe safety-relevant information in the operating manual

3.6 Required accessories

3.6.1 Fixed-angle rotors

Identifying features:

- Rotor lid screw – black or silver-metallic
- Overspeed adapter – turquoise

3.6.2 Swing-bucket rotors

Identifying features:

- Rotor cross
- Overspeed adapter – turquoise
- Various rotor buckets

4 Functional description

4.1 Centrifugation runs

You can perform various centrifugation runs:

- A centrifugation run with a time setting stops after the set duration.
- A centrifugation run without a time setting requires manual termination using the *Stop* button.

4.2 Temperature control

The rotor chamber can be pre-cooled or pre-heated before centrifugation. The centrifuge does not have a fixed temperature control run program. Depending on the application, select the desired target temperature and one of the following options:

- Temperature control without a run: Set the desired target temperature and close the centrifuge lid. The rotor chamber is temperature-controlled while the lid is closed. Temperature control occurs more slowly when the rotor is not spinning.
- Temperature control with the rotor installed: Install the rotor without samples. Set the desired target temperature and a speed, close the centrifuge lid, and start the run. The rotor chamber, rotor, and accessories are temperature-controlled. This method adjusts the temperature of the rotor chamber faster than temperature control without a run.

During centrifugation, the rotor chamber is maintained at the set target temperature.

After centrifugation, the rotor chamber continues to be maintained at the target temperature indefinitely, provided the centrifuge remains switched on and the lid closed.

4.3 VisioNize Lab Suite

The VisioNize Lab Suite is a cloud-based platform.

To send performance data to the VisioNize Lab Suite, for example, you can integrate the device into the local area network using a standard Ethernet cable of type SF/FTP, S/FTP, SF/UTP, S/UTP.

Further information is available from your local Eppendorf partner and in the document "VisioNize Lab Suite Setup Guide".

4.4 Communication with external devices

You can read various device status values via an external interface. To query a specific value, use an HTTP request in a command-line interpreter on the external PC.

In particular, the special requirements for the JSON RPC interface must be observed.

4.5 Rotor detection

Rotor detection

The rotor is automatically detected when a centrifugation run starts. Alternatively, the rotor can be spun manually before the centrifugation run begins so that the device detects it. The device limits the speed of the detected rotor to its maximum speed.

If the rotor installed in the device was not detected before the start of the log, the device can detect the rotor during the centrifugation run. Rotor detection is recorded as an event in the event log. However, the run record continues to display the rotor that the device assumed was installed at the start of the centrifugation run.

For the device to detect the rotor, the user can turn the rotor manually. If the rotor is turning, a closed device lid cannot be opened and the centrifugation cannot be started. The user must wait for the rotor to stand still.

Rotor lid detection

The device can detect whether the rotor lid is attached. If a centrifugation run starts without a rotor lid attached, the device detects the missing rotor lid and activates the safety mechanism. If the rotor lid is missing, the safety mechanism ensures that the rotor decelerates. Deceleration prevents the rotor from being loosened by the lifting forces during rotation.

4.6 Rotor duty cycles

After the rotor is inserted or rotated, or centrifugation is started, the centrifuge automatically detects which rotor is being used. The rotor duty cycles are set by the manufacturer and cannot be changed. You can find the duty cycles in the main menu under *Device Health* > *Rotors* > *[Rotor name]*.

4.7 Overview of basic functions

Imbalance detection

The imbalance detection feature allows the device to detect if the rotor is unevenly loaded during centrifugation. The device stops the centrifugation process and prevents damage to the device and rotor.

Even if the imbalance of the rotor is within the permissible range, the imbalance detection may trigger if the acceleration ramp is set to less than 9. This is normal and no reason for concern.

Time Counting function

You can set the start time for centrifugation time measurement.

The following settings are available:

Option	Icon	Function
Immediately		Time measurement starts immediately.
Speed Reached		Time measurement starts when up to 97 % of the set speed has been reached.

Favorites function

The Favorites function allows you to create individual favorites. You can overwrite preset favorites by pressing and holding the favorite in the device software.

Time, Temperature, and Speed each define a permissible range of values that cannot be exceeded when creating favorites. If a favorite is grayed out in the Speed category, that speed or *g*-force is not compatible with the rotor being used.

If user management is enabled, the Favorites function is linked to user rights. Users with restricted rights cannot create or modify favorites.

Programs **function**

The order of the programs can be freely selected.

If program parameters are incompatible with the rotor being used, a red icon with a warning symbol appears next to the program name.

If user management is enabled, the Programs function is linked to user rights. Users with restricted rights can only start programs. They cannot create or modify programs.

You manage a program via the options menu using the 3-dot button. The following options are available:

Option	Function
Overwrite with Current Parameters	Overwrite parameters stored in the program with the currently set parameters
Rename	Change program name
Delete	Delete program
Add Step	Add program step
Show Info	Display parameters stored in the program

Standby mode

If the device remains inactive for a set period, it switches to standby mode. To activate standby mode on specific days and times, you can program it for a one-time event or on a recurring basis.

To resume operation on schedule, you can configure the device to wake up from standby mode at a specific time.

If you have disabled user management, you can also activate standby mode immediately by tapping the Standby button on the home screen or in the main menu.

Device health

The device health provides an overview of the following device components:

- Data storage
- Rotors
- Device usage

The device status indicates whether the device is ready for use or requires maintenance.

There are 3 statuses:

Icon	Status
	good
	*marginal, Warning, Issue*
	*Critical, action required*

Data storage

Under data storage, you will find an overview of the percentage occupancy by the data records of events or run records.

When you access the data records of events or run records, you can view the status of current or remaining data records, necessary actions, and the number of data records in the data storage.

5 Installation

The device may only be installed and put into operation by an authorized service technician.

5.1 Checking connection requirements

All prerequisites must be met before the device can be installed and put into operation.

Contact your Eppendorf partner in advance.

Refer to the Pre-Installation Questionnaire for information on device requirements that you or a service technician must check in advance.

The owner is responsible for ensuring that the device is operated in compliance with all applicable standards, legal regulations, technical rules, and local connection requirements. The owner must also ensure that the existing electrical installation is suitable and adequately sized for the intended operation.

If the device is to be permanently connected to the power supply without a power plug, use a certified power cord that meets the specifications below. Additionally, install a separate circuit breaker with the rated current specified below to serve as a disconnecting device:

- Power cord: 600 V; AWG 10; STO 4.1 m (3.3 m of which is outside the device)
- Circuit breaker: 30 A

5.2 Checking the location

NOTICE! Disruption of the radio link

For devices with class A interference emission in accordance with EN IEC 61326-1/EN 55011: The device cannot ensure adequate protection of radio reception in residential areas and domestic environments. The device may cause radio interference in residential or domestic environments.

– Do not use the device in residential or domestic environments.

All requirements must be met before the device can be installed and put into operation.

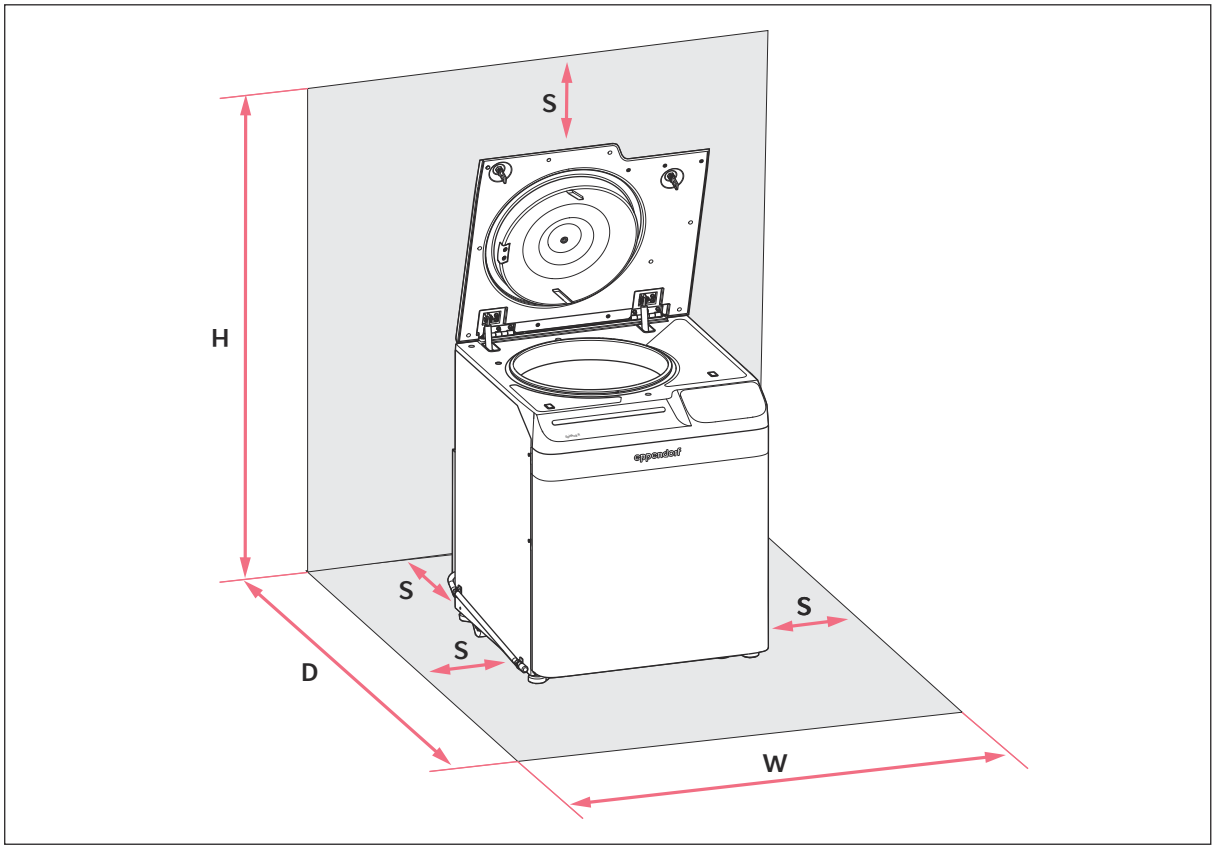

Fig. 5-1: Footprint of the SpinPro 8 R

W	130 cm	H	121.5 cm
D	106 cm	S	30 cm

1. Check whether the location meets the following conditions:
   - Ambient conditions in accordance with the specifications in the Technical data chapter
   - Minimum distance to other devices and walls: 30 cm
   - Footprint capable of supporting the weight of the device
   - Good ventilation
   - Stable flooring such as concrete or stone
   - Smooth, level floor
   - Non-explosive environment
   - No presence of persons within the 30 cm safety zone while the device is operating
   - No storage of hazardous substances within the device's safety zone
   - No objects placed in the gap between the front panel and the floor
   - Accessible only to authorized personnel

2. Check whether the location is protected against the following influences:
    - Heat sources
    - Sparks
    - Open flames
    - Direct sunlight
    - UV radiation
    - Strong electromagnetic radiation

5.3 Checking the delivery and packing

1. Check whether the packages indicated on the delivery note match the packages actually delivered.
2. Check the packing for transport damage.
3. Report any visible damage to your Eppendorf partner.

5.4 Checking the delivery condition

1. Check the device and accessories for visible damage.
2. Report any damage to your Eppendorf partner.

5.5 Checking the delivery package

1. Check that the supplied components match the specifications of the delivery package.
2. If any parts are missing, contact your Eppendorf partner.

Quantity	Description
1	Centrifuge as ordered
1	Rear fan duct
1	Spirit level
1	Clamp (large)
1	Clamp (small)
1	Hexagonal rod
1	Hexagonal wrench
1	Silicone grease
1	Lubricating grease for screws
1	Cleaning rod
1	Download instructions for customer documents

5.6 Switching on the device

Prerequisites:

- The device has been installed and connected by Eppendorf Service.
- The device has been in its location for at least 4 h.

1. If the device's power cord is fitted with a power plug, insert the power plug into a suitable power socket.
2. If the device is permanently connected, switch on the external circuit breaker.
3. Switch on the device using the power switch.

5.7 Leveling the device

Contact your authorized service technician to level the device.

Prerequisites:

- The device has been installed.

1. Switch on the device.
2. Open the centrifuge lid.
3. Place the spirit level across the top of the motor shaft.

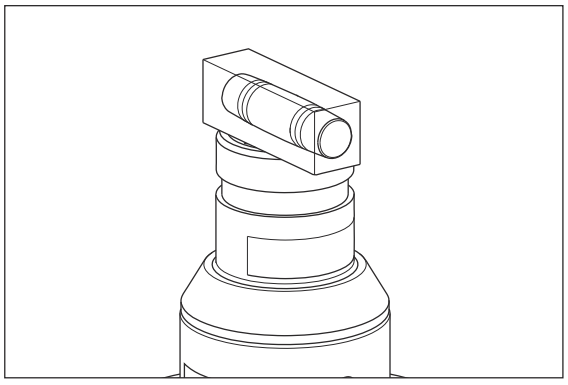

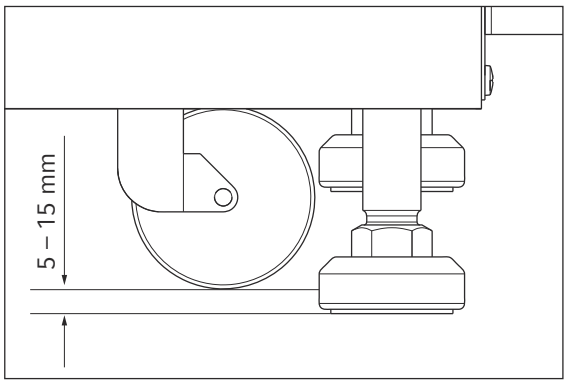

4. Using a screw wrench, adjust each of the 4 device feet so that the device's heavy-duty castors are 5 to 15 mm above the floor.
5. Once the device is level, remove the spirit level.
6. Ensure that all 4 device feet are securely fixed and free of play.

5.8 Protecting the device against cyber attacks and data loss

Protecting the device from cyberattacks

Only enable the JSON-RPC interface if it is actually used.

NOTICE! Data security

After enabling JSON-RPC, unencrypted device data can be queried on the local area network.

- Do not connect the device directly to the Internet.
- Only enable JSON-RPC if you need to query data over the network.

1. Select *Main Menu* > *Settings* > *Network*.
2. Disable all unnecessary access authorizations.
3. Select *Main Menu* > *Settings* > *Data Exchange*.
4. Disable all unnecessary data exchange options.
5. Use user management.
6. Ensure users regularly change their strong passwords.
7. Enable automatic logout.
8. Log out after using the device.

Protecting the device from data loss

Only enable the JSON-RPC interface if it is actually used.

NOTICE! Data security

After enabling JSON-RPC, unencrypted device data can be queried on the local area network.

- Do not connect the device directly to the Internet.
- Only enable JSON-RPC if you need to query data over the network.

1. Enable user management for additional data security.
2. Avoid data loss by exporting your device data.

5.9 Establishing a network connection

5.9.1 Connecting the device to a network

Material:

- Standard ethernet cable

Prerequisites:

- There is a free **Ethernet** port in the vicinity of the device.
- You have administrator rights.

1. Insert the end of the standard ethernet cable into the **Ethernet** port of the device.
2. Insert the other end of the standard ethernet cable into a free **Ethernet** port of the local network.

6 User management

6.1 User management concept

With user management, you organize user access to various device functions.

Three user roles are defined by default:

- Administrator
- User with standard rights
- User with restricted rights

As an administrator, to specify which user roles can be used, tap *Main Menu* > *User* > *Configuration*.

If user management is not used and no user account has been created, every user has the same rights as an administrator. The first user account created is automatically an administrator account.

6.2 Roles and rights

An administrator with user management enabled, or a user with user management disabled, has all rights. When user management is enabled, roles and rights are assigned to the other user roles by default as follows:

Function/menu	Right	User	Restricted user	Not logged in
Open	Open centrifuge lid	X	X	–
Start	Start centrifugation run	X	X	–
Stop	Stop centrifugation run	X	X	X
Favorites	Define and save favorites	X	–	–
Programs	Create program	X	–	–
	Edit program	X	–	–
	Access program	X	X	–
	Start program	X	X	–
Main menu > *Configuration* > *Language*	Select language	X	X	–
Main menu > *Configuration* > *Audit-Safe Operation*	Enable and disable audit-safe operation	–	–	–
Main menu > *Configuration* > *Certificates*	Export public key	X	X	–

Function/menu	Right	User	Restricted user	Not logged in
Main menu > *Configuration* > *Data Exchange*	Enable VisioNize Lab Suite	–	–	–
	Enable JSON-RPC	–	–	–
Main menu > *Configuration* > *Date & Time*	Enable and disable *automatic date & time* switch	–	–	–
	Edit NTP server	–	–	–
	Edit date	–	–	–
	Edit time	–	–	–
	Edit time zone	–	–	–
Main menu > *Configuration* > *Date & Time* > *NTP Server*	Enable public NTP server	–	–	–
	Enable manual setup for NTP server	–	–	–
	Edit NTP server configuration	–	–	–
	Server synchronization	–	–	–
Main menu > *Configuration* > *Device Information*	Edit device information	–	–	–
Main menu > *Configuration* > *Display* > *Display Brightness*	Adjust display brightness	X	X	–
Main menu > *Configuration* > *Display* > *Energy Save Mode*	Enable power saving mode	–	–	–
Main menu > *Configuration* > *Display* > *Timeout*	Set timeout	–	–	–
Main menu > *Configuration* > *Network* > *IP Configuration*	Edit network	–	–	–
	Edit IP configuration	–	–	–
Main menu > *Configuration* > *Sound*	Enable and disable audible notifications	–	–	–
	Test	X	X	–

Function/menu	Right	User	Restricted user	Not logged in
	Edit notification level	–	–	–
Main menu > Configuration > Software	*Show Update*	–	–	–
	Perform software update	–	–	–
Run Records	*Export*	X	X	X
	Filter	X	X	X
Events	*Export*	X	X	–
	Filter	X	X	X
Issues	*Stop*	X	X	X
	Stop & Acknowledge	–	–	–
	Snooze	X	X	X
Users > Configuration > Automatic Logout	Enable and disable automatic logout	–	–	–
Main menu > Screen Lock	Enable screen lock	–	–	–
Users > Accounts	*Add User*	–	–	–
	Reset Password	–	–	–
	Delete	–	–	–
	Edit user role	–	–	–
	Export	–	–	–
	Import	–	–	–
Users	Deactivate User Management	–	–	–
	Import	–	–	–
	Export	–	–	–
Users > Configuration	Edit user management settings	–	–	–
Standby	Enable and disable standby	X	X	–

6.3 Editing user management

Prerequisites:

- The user management is configured.
- You are logged in as an administrator.

1. Tap *Main Menu* > *Users* > *Configuration*.
2. Configure the user management settings as follows:
    - *Assignable User Roles*: Specifies which user roles can be created for user accounts.
        - None: All user accounts have the same rights as an administrator.
        - Administrator only
        - User and Administrator
        - Restricted User, User, and Administrator
    - *Change of Login Mode*
        - *Simplified*: Login requires a user name without a password. An administrator must log in with a user name and password.
        - *Secure*: Login requires a user name and password for all users.
    - *Personalization*: Settings, such as language, are saved for the logged-in user.
    - *Automatic Logout*: Sets the time after which an inactive user is automatically logged out.
    - *Recovery Method* – deactivated by default
        - *Off*: Service personnel cannot restore access. If you forget or lose the password for your administrator accounts, data may be lost.
        - *Service*: You can have an Eppendorf SE service technician restore user management, provided the *Service* recovery method was activated before the administrator password was lost. Only a service technician can access and restore user management as a *Service* user.

6.4 Restoring user management

Data loss due to lost administrator password

If you have forgotten or lost the password for your administrator accounts, you will no longer be able to edit user management.

Prerequisites:

- The *Service* recovery method was enabled before the administrator password was lost.

1. An Eppendorf SE service technician creates a user account with administrator role as user *Service*.

   User *Service* can access and restore user management.

6.5 Exporting user management

Prerequisites:

- You are logged in as an administrator.
- User management with additional user roles is used.

1. Insert the USB stick into the USB interface of the device.
2. Tap *Main Menu* > *Users* > *Export*.

3. Select the parameters you want to export:
   - User management settings
   - User accounts
   - Personalizations
4. Confirm your entry.
   - The data is exported.
   - The data is located on the USB stick in the *Eppendorf* > *Model name* > *user_management* folder.
5. Remove the USB stick from the USB interface of the device.

6.6 Importing user management

If you import a user management, the previous user management will be overwritten. You cannot restore the previous user management.

To back up the previous user management, export the data.

Prerequisites:
- The previous user management of the device has been exported.
- The user management to be imported is stored on a USB stick.

1. Insert the USB stick into the USB interface of the device.
2. If user management is enabled, log in to the device as an administrator.
3. Tap *Main Menu* > *Users* > *Import* > *Next*.
4. Tap *Next*.
5. Select the user management you want to import.
6. Confirm your entry.
7. Select which parameters you want to import:
   - User management settings
   - User accounts
   - Personalizations
8. If you have enabled user management, enter the password for the administrator account.
9. Confirm that you want to delete the existing data.

   The user data will be imported.
10. Remove the USB stick from the USB interface of the device.

6.7 Adding a user account

Prerequisites:
- You are logged on as an administrator.
- User management with additional user roles is used.

1. Tap *Main Menu* > *Users* > *Accounts* > *Add User*.

2. In the *Enter user name* field, enter a unique name without spaces at the start and end and confirm the entry.
3. Assign a password with at least 4 characters and confirm the entry.
4. Select the desired role from the *Select role* drop-down menu.
5. Share the password with the user. The user will be asked to change this password after the initial login.

6.8 Editing a user account

Editing your own user account

You cannot change the user name as this is a unique ID.

1. Tap *Main Menu* > *Users* > *Accounts*.
2. Select your own user account.
3. To change the information, tap the *Password* field.

Editing user accounts as an administrator

You cannot edit the user name as this is a unique ID.

Prerequisites:

- You are logged on as an administrator.

1. Tap *Main Menu* > *Users* > *Accounts*.
2. Select a user account.
3. To change the information, tap the corresponding field.

   You can change the entries in the following fields:

   - *Password*
   - *Role*

6.9 Deleting a user account

Prerequisites:

- You are logged in as an administrator.

1. Tap *Main Menu* > *Users* > *Accounts*.
2. Select the user account you want to delete.
3. Tap the recycling bin symbol and confirm your selection.

6.10 Logging in as a user via touch screen

If you are logging in for the first time or have received a new password, change the previous password.

Prerequisites:

- User management with additional user roles is used.
- The user account is set up.

1. Tap *Login*.
2. Enter your login details.



If you have set up simplified login mode, simply select the user name. You do not need to enter a password in simplified login mode unless you have the administrator user role.

6.11 Changing the password

Change the password



Each user can only change their own password.

1. Tap *Main Menu* > *Users* > *Accounts* > *Change Password*.
2. Change the password of your user account and confirm your entry.

Resetting the password

Prerequisites:

- You are logged in as an administrator.

1. Tap *Main Menu* > *Users* > *Accounts*.
2. Select a user account and tap *Reset Password*.
3. Change the password and confirm your entry.

6.12 Logging out as a user

Prerequisites:

- You are logged in as a user.

1. Tap *Logout*.

7 Preparing the device for use

7.1 Selecting the rotor and accessories

1. Select the rotor, adapter, and vessels according to your application.
2. Use a rotor lid suitable for the fixed-angle rotor. Ensure that the rotor designation on the rotor and the rotor lid match.
3. Ensure that rotors, rotor lids, and accessories meet the following requirements:
   - Maximum service life not exceeded
   - Undamaged
   - No corrosion
   - No material changes
   - Undamaged and clean seals
   - Seals not protruding at any point
4. Ensure that the vessels meet the following requirements:
   - Approved by the manufacturer for this application
   - Chemically resistant to the sample
   - Designed for the intended load
   - Undamaged
   - Not deformed
   - Not brittle

7.2 Opening the device lid



CAUTION! Head injuries

The falling device lid can cause a head injury.

– Open the device lid fully to ensure that the device lid cannot slam shut.



CAUTION! Crushing injuries to hands

If the device lid falls shut, this may cause hand injuries.

– Open the device lid fully to ensure that the device lid cannot slam shut.

1. Tap *Open* .
   - The device lid opens automatically.
   - The display shows:
     – *Opening…* during the opening process
2. Open the device lid as far as it will go.

7.3 Closing the device lid

The lid latch does not fully engage until a centrifugation run is started.



CAUTION! Crushing injuries to hands

When closing the device lid, there is a risk of hand injury.

– Do not reach into the space between the device and lid.
– Do not reach into the locking mechanism of the device lid.

Prerequisites:

- The installed rotor has stopped.

1. Press the device lid down until it is closed, leaving only a small gap. Take care not to snag your sleeve on the lid latch hooks on the device.

   Once the device lid is closed, the *Open* button appears. This button unlocks the device lid. When the device lid is unlocked, it opens automatically. If the device lid does not open automatically, you can open it manually.

7.4 Replacing the rotor

7.4.1 Removing the rotor

1. Lift the rotor vertically out of the device.

7.4.2 Transporting the rotor

Protective equipment:

- Safety shoes

Material:

- Transport aid

Prerequisites:

- A sufficient number of personnel are available to assist with transport.
- The location meets the specified requirements.

1. Transport the rotor using a transport aid, such as a mobile table or a pallet truck.
2. Avoid subjecting the rotor to jolts or vibrations.

7.4.3 Inserting the rotor

Prerequisites:

- A suitable rotor is available.

1. Place the rotor vertically onto the motor shaft.

7.5 Triggering rotor detection



CAUTION! Risk of hand injuries

Manually rotating a swing-bucket rotor may cause hand injuries from the rotor cross or the swinging buckets.

– Remove your hands from the rotor cross immediately after attaching the rotor.

Prerequisites:

- The device lid is open.
- The rotor is installed.

1. Turn the rotor by hand in the direction of rotation of the device.

   Rotor detection is triggered.

   The rotor name appears on the display.

   Once the device detects the rotor, it checks the nominal speed. The nominal speed of the rotor used is automatically limited to the maximum speed.

7.6 Tempering the rotor chamber

Prerequisites:

- There are no samples in the rotor.
- The rotor is correctly inserted and secured.
- Rotor buckets and adapters are correctly inserted.
- The rotor lid is correctly installed.
- The device lid is closed.

1. Tap *Time*.
2. Tap *Duration*.
3. Set a centrifugation time.
4. To define when timing begins, select the appropriate button for the *Time Counting* function.
5. Confirm your entries.
6. Tap *Temperature*.
7. Set the desired target temperature, e.g., 4 °C.
8. Confirm your entry.
9. Tap *Speed*.
10. Select a speed in the medium range suitable for your rotor.
11. Set a set value for rcf or rpm.
12. If using an adapter with samples, set the radius under rcf.
13. Confirm your entry.
14. Start the centrifugation run.
    - The remaining duration and current speed appear on the display.

7.7 Preparing accessories and consumables

High temperatures can lead to higher sample temperatures. Pay attention to the ambient conditions given in the technical data.

Preparing vessels

NOTICE! Damage to the rotor, accessories, and samples

If the maximum *g*-force is exceeded, inserted sample vessels may break and damage the device, accessories, and samples.

– Observe the vessel manufacturer's specifications.
– Only use undamaged vessels.

Protective equipment:
- Laboratory protective clothing

Prerequisites:
- The vessels have been checked and are suitable for the centrifugation parameters.
- The adapters are suitable for the vessels.

1. Ensure that the load does not exceed the permissible weight.
2. Ensure that opposing filled vessels have the same weight.
3. Ensure that the samples in the containers are properly balanced.

Information regarding the permissible load weight can be found on each rotor and in the rotor's instructions for use.

8 Operation

8.1 Performing centrifugation

8.1.1 Performing centrifugation with a time setting

Values already entered for the speed in rpm or the *g*-force in rcf are automatically converted when switching between rpm and rcf input modes. The radius can only be set for rcf. The radius is not relevant for entering the rpm value.

Prerequisites:

- The rotor is installed.
- The rotor has stopped.
- The rotor is loaded.
- The rotor lid is closed.
- The device lid is closed.

1. Tap *Time*.
2. Tap *Duration*.
3. Set a centrifugation time.
4. To define when timing begins, select the appropriate button for the *Time Counting* function.
5. Confirm your entries.
6. Tap *Temperature*.
7. Set the target temperature.
8. Confirm your entry.
9. Tap *Speed*.
10. Select the desired mode.
11. Set a set value for rcf or rpm.
12. Set the radius under rcf.
13. Confirm your entry.
14. If you are using adapters and want to define the acceleration and deceleration ramps, tap *Ramps*.

    To define the speed at which the deceleration ramp should start, tap *Start of deceleration ramp* .
15. Confirm your entry.
16. Start centrifugation using the *Start* button.
    - The *Open* button is disabled.

17. Wait until the centrifugation time has elapsed.
    - Centrifugation stops automatically.
    - The rotor brakes to a standstill.
    - A signal tone sounds repeatedly if activated in the settings.
    - The *Open* button flashes.
    - Once the rotor has come to a standstill, the display shows:
      – The time elapsed since the rotor stopped
      – *Finished*

    The centrifuge cools the rotor chamber as long as the device lid remains closed.
18. To open the device lid and use further functions, tap the *Open* button.
19. Remove the samples.

8.1.2 Performing centrifugation without a time setting

Values already entered for the speed in rpm or the *g*-force in rcf are automatically converted when switching between rpm and rcf input modes. The radius can only be set for rcf. The radius is not relevant for entering the rpm value.

Prerequisites:
- The rotor is installed.
- The rotor has stopped.
- The rotor nut is tightened.
- The rotor is loaded.
- The rotor lid is closed.
- The device lid is closed.

1. Tap *Time*.
2. Tap *Continuous*.
3. Confirm your entries.
4. Tap *Temperature*.
5. Set the target temperature.
6. Confirm your entry.
7. Tap *Speed*.
8. Select the desired mode.
9. Set a set value for rcf or rpm.
10. Set the radius under rcf.
11. Confirm your entry.
12. To define the acceleration and deceleration ramps, tap *Ramps*.

    To define the speed at which the deceleration ramp should start, tap *Start of deceleration ramp*.
13. Confirm your entry.

14. Start centrifugation using the *Start* button.
    - The *Open* button is disabled.
15. To end the centrifugation run, tap the *Stop* button.
    - The rotor brakes to a standstill.
    - The *Open* button flashes.
    - Once the rotor has come to a standstill, the display shows:
      – The time elapsed since the rotor stopped
      – *Finished*

    The centrifuge cools the rotor chamber as long as the device lid remains closed.
16. To open the device lid and use further functions, tap the *Open* button.
17. Remove the samples.

8.1.3 Switching off the device

Prerequisites:
- The centrifugation run is finished.
- The device lid is open.

1. Switch off the device using the power switch.

8.2 Advanced settings

8.2.1 Entering and accessing device information

Prerequisites:
- To enter device information, you must be logged in as an administrator.

1. Tap *Main Menu* > *Configuration* > *Device Information*.
2. Enter the following information for this device or access the corresponding device information:
    - *Name*: Enter the device name.
    - *Model*: Displays the model name of the device, which appears, for example, in the directory on the USB stick.
    - *Serial Number*: Displays the serial number of the device.
    - *Inventory Number*: Enter the inventory number of the device.
    - *Location*: Edit the information about your specific device location.
    - *License Information*: Displays the license information of implemented programs and functions.


If you have enabled user management, log in.

8.2.2 Configuring the network

You can connect the device directly to the Internet and an internal network. An Internet connection is not required for operation. If the device is connected to the Internet, the owner is responsible for data security.

- Only a network administrator is authorized to establish the connection to the internal network or the Internet.
- Check the settings for the internal network or the Internet before establishing a connection.

1. Tap *Main Menu* > *Configuration* > *Network*.
2. To configure the network, make the settings as follows:
   - *Lan 1*: Internet connection status display:
     – Green = connected
     – Red = not connected
     – Gray = unknown
   - *IP Address*: Displays IP addresses.
   - *MAC Address*: Displays MAC addresses.
   - *IP Configuration*:
     – *DHCP*: The device uses an IP address that has been automatically assigned to it by an existing DHCP server.
     – *Manual Setup*: Enter network settings for the IPv4 address, subnet mask, gateway, and DNS server.

8.2.3 Setting the date and time

Setting the date and time manually

1. Tap *Main Menu* > *Configuration* > *Date & Time*.
2. Disable *Automatic Date & Time*.

   The menu item for the *NTP Server* network time protocol is disabled.
3. Enter the current date under *Date*.
4. Enter the current time under *Time*.
5. Select a time zone under *Time Zone*.

Setting the date and time automatically

1. Tap *Main Menu* > *Configuration* > *Date & Time*.
2. Enable *Automatic Date & Time*.

   The software automatically detects the date and time in your time zone. This disables the *Date* and *Time* fields.

3. Configure the *NTP Server* settings as follows:
   - *NTP Server Configuration*: Enable a public NTP server or a manual setup.
   - *NTP Server*:
     – Select the public NTP server from the drop-down list.
     – For a manual setup, enter up to four NTP server addresses.
   - Server synchronization: To display the synchronization status for a configured NTP server, update the synchronization.
4. Select a time zone under *Time Zone*.

   The following menu items will be displayed as follows:
   - *Date*: Country-specific date format
   - *Time*: Format: hh:mm

8.2.4 Setting the language

If user management is disabled, personalization is disabled. The language setting you select will be applied to all other users.

Prerequisites:
- User management and personalization are enabled.

1. Tap *Main Menu* > *Configuration* > *Language*.
2. Select the display language for the device.

   You have set the display language for your account.

8.2.5 Activating audit-safe operation

Prerequisites:
- You are logged in as an administrator.

1. Tap *Main Menu* > *Configuration* > *Audit-Safe Operation*.
2. Activate audit-safe operation.
3. Configure an archiving location for audit-safe operation: *USB*, *Network Location* or *Third-Party API*.

8.2.6 Setting standby mode

8.2.6.1 Enabling standby mode

Prerequisites:
- User management is disabled.
- There are no critical messages.
- The device is not currently performing a centrifugation run, data transfer, or software update.

1. Tap the *Standby* button.

If user management is enabled, the *Logout* button will be located here. You can access the *Standby* button via the main menu.

8.2.6.2 Disabling standby mode

Prerequisites:

- Standby mode is enabled.

1. Tap the touch screen.



If you have enabled user management, log in.

8.2.6.3 Setting the duration of inactivity for standby mode

1. Tap *Main Menu* > *Configuration* > *Standby* > *Automatic Standby after Inactivity*.
2. Set the duration of inactivity after which the device will switch to standby mode.

8.2.6.4 Configuring scheduled standby mode

1. Tap *Main Menu* > *Configuration* > *Standby* > *Scheduled Standby*.
2. Specify how often scheduled standby mode is enabled.
3. Select the times for standby mode.
4. Save your settings.

8.2.6.5 Configuring scheduled wake-up

1. Tap *Main Menu* > *Configuration* > *Standby* > *Scheduled Wake-up*.
2. Specify how often the device is scheduled to wake from standby mode.
3. Select the times for scheduled wake-up.
4. To resume operation on time, save your settings.

8.2.7 Changing display settings

8.2.7.1 Adjusting the brightness

Adjust the display brightness manually

1. Tap *Main Menu* > *Configuration* > *Display* > *Display Brightness*.
2. Use the slider to adjust the display brightness.
   The display brightness will adjust accordingly.

8.2.7.2 Enabling power saving mode

1. Tap *Main Menu* > *Configuration* > *Display*.
2. Enable the *Energy Save Mode* switch.
   The *Timeout* function is enabled.

If you tap *Timeout*, you can set the time period after which the display is dimmed.

8.2.7.3 Setting the timeout

If no user input is made within the selected time period, the display brightness will be dimmed by the timeout.

Prerequisites:

- Power saving mode is enabled.

1. Tap *Main Menu* > *Configuration* > *Display*.

If you tap *Timeout*, you can set the time period after which the display is dimmed.

8.2.8 Adjusting the signal tone

8.2.8.1 Enabling audible notifications

1. Tap *Main Menu* > *Configuration* > *Sound*.
2. Enable *Audible Notifications*.

- Tap the *Test* button to trigger a short test sound of the audible notification.
- If you have enabled user management, log in.

8.2.8.2 Disabling audible notifications

1. Tap *Main Menu* > *Configuration* > *Sound*.
2. Disable *Audible Notifications*.

If you have enabled user management, log in.

8.2.8.3 Setting the notification level

1. Tap *Main Menu* > *Configuration* > *Sound* > *Notification Level*.
2. Select the notification level for audible notifications.

8.2.8.4 Activating the tone at the end of a run

1. Tap *Main Menu* > *Configuration* > *Sound*.
2. Activate *End of Run Sound*.

Tapping the *Test* button triggers a brief, test tone for the acoustic notifications.

8.2.8.5 Disabling the tone at the end of a run

1. Tap *Main Menu* > *Configuration* > *Sound*.
2. Disable *End of Run Sound*.

8.2.9 Checking the device health

Here you can view the current status of the data storage, all rotors, and device usage.

1. Tap *Main Menu* > *Device Health*.

8.2.10 Managing data

8.2.10.1 Accessing data exchange

1. To enable data exchange in an available format, tap *Main Menu* > *Configuration* > *Data Exchange*.

8.2.10.2 Accessing data exchange

1. To enable data exchange in an available format, tap *Main Menu* > *Configuration* > *Data Exchange*.

8.2.10.3 Activating the VisioNize Lab Suite

Once you have registered the device in the VisioNize Lab Suite, you can activate data exchange with it. If you do not yet have an account, you can obtain one from the Eppendorf SE eShop.

1. Tap *Main Menu* > *Configuration* > *Data Exchange*.
2. Activate VisioNize Lab Suite.
3. Follow the instructions on the device.

8.2.10.4 Enabling JSON-RPC

NOTICE! Data security

After enabling JSON-RPC, unencrypted device data can be queried on the local area network.

- Do not connect the device directly to the Internet.
- Only enable JSON-RPC if you need to query data over the network.

An HTTP interface is available with which various device data can be queried using the JSON-RPC (JavaScript Object Notation Remote Procedure Call) data exchange format.

1. Tap *Main Menu* > *Configuration* > *Data Exchange*.
2. Enable *JSON-RPC*.

8.2.10.5 Querying data via external devices

Prerequisites:

- *JSON-RPC* is enabled.
- The device and the end device with which the data is to be queried are connected.

1. Visit the Eppendorf website for a detailed interface description and a usage example.

8.2.11 Creating a program

Prerequisites:

- You are logged in to the device as an administrator or user.
- The device is not performing a centrifugation run.
- The *Programs* tab is selected on the home screen.

1. Set the desired parameters for your centrifugation run.
2. Select *Save current parameters as new program* at the end of the program list.
3. Assign a program name.
4. Confirm the entry.

8.2.12 Creating a multi-step program

You can only set radii and ramps with acceleration and deceleration times in a single-step program or during a centrifugation run.

Prerequisites:

- You are logged in to the device as an administrator or user.
- The device is not performing a centrifugation run.
- A time setting with a limited run time is activated on the home screen: *Time* > *Duration*.
- The *Programs* tab is selected on the home screen.

1. Tap *Save current parameters as new program* at the end of the program list.
2. Confirm the prompt.
3. Assign a program name.
4. Save the program
5. To edit a multi-step program, tap the 3-dot button.
6. Tap *Add Step*.
7. Set a centrifugation time.
8. Confirm your entries.
9. Set the target temperature.
10. Confirm your entries.
11. Tap *Speed*.
12. Select the desired mode.
13. Set the nominal speed or the *g*-force.

14. Confirm the entry.

    An overview of the set values appears.
15. To add up to 5 steps, repeat steps 6—14.
16. To set the duration, tap *Add Timer*.
17. Set the duration.
18. Confirm your entries.

8.2.13 Accessing a program

Prerequisites:

- The device is not performing a centrifugation run.

1. Tap the *Home screen* button
2. Select *Programs*.
3. Select a program from the program list.
4. Start centrifugation with the *Start* button.

8.2.14 Setting favorites

Prerequisites:

- The device is not performing a centrifugation run.

1. Tap the *Home screen* button.
2. Select *Favorites*.
3. To adjust a value, press and hold a preset value for about 2 s.
4. Enter the new value.
5. Confirm your entry.

8.2.15 Accessing events

100000 notifications and messages are stored. If there are more than 100000 entries, the oldest entries will be overwritten. To avoid losing these records, export them. Under *Device Health*, you can see how many events you can still store under *Data Storage*.

1. Tap *Main Menu* > *Events*.
2. Select an event from the list.

   A window with information about the event appears.

8.2.16 Run Records

8.2.16.1 Filtering run records

The device stores 1000 centrifugation runs. If there are more than 1000 centrifugation runs, the oldest data will be overwritten.

1. Tap *Main Menu* > *Run Records*.
2. Tap the Filter icon.
3. Select the desired filter.

To disable all filters, tap *Reset Filters*.

8.2.16.2 Accessing run records

1. Tap *Main Menu* > *Run Records*.
2. Select a centrifugation run from the list.

   A window with information about the centrifugation run appears.

8.2.17 Accessing data storage

100000 notifications and messages are stored. If there are more than 100000 entries, the oldest entries will be overwritten. To avoid losing these records, export them.

1. Tap *Main Menu* > *Device Health* > *Data Storage*.

8.2.18 Exporting data

You can export events, run records, system information for service, and device information to a USB stick as a CSV table. Run records can also be exported as a PDF file.

1. Connect a USB stick.
2. Tap *Main Menu* > *Export*.
3. Select the data to export.
4. Tap *Export*.
5. Confirm the export.

If user management is enabled, you can also export favorites and other personalized settings for individual users.

8.2.19 Exporting certificates

This menu provides an overview of the certificates available on the device.

Prerequisites:

- You have connected a USB stick.

1. Tap *Main Menu* > *Configuration* > *Certificates*.
2. To verify the signatures of exported or archived data with the public key, tap *Export*.

   The certificates have been exported to the USB stick.

9 Maintenance

Cleaning and decontamination may also be necessary as a safety precaution before laboratory centrifuges, rotors, and their accessories are serviced, repaired or passed on. Manufacturers may provide a user declaration form to document that such device treatment has been carried out (source: IEC 61010-2-020, in the current version).

The chapter for the maintenance of the rotors can be found in the respective instructions for use provided with the rotor.

9.1 Maintenance plan

Interval	Maintenance work
As required	➦ *Chapter 9.2.1 "Emptying the drain tubing" on page 57*
	➦ *Chapter 9.3.1 "Cleaning the device after glass breakage" on page 59*
	➦ *Chapter 9.3.2 "Cleaning a fixed-angle rotor after vessel breakage" on page 60*
	➦ *Chapter 9.3.3 "Cleaning accessories" on page 61*
	➦ *Chapter 9.3.4 "Cleaning the touch screen" on page 61*
	➦ *Chapter 9.4.1 "Decontaminating the device" on page 62*
Before each use	➦ *Chapter 9.2.2 "Checking the device" on page 58*
	➦ *Chapter 9.2.3 "Checking the rotor and accessories" on page 58*
50 autoclaving cycles	➦ *Chapter 9.2.5 "Replacing the sealing ring on caps" on page 58*

9.2 Maintenance

Eppendorf SE recommends having your device inspected and maintained at regular intervals by trained and skilled personnel.

Eppendorf SE offers customized service solutions for preventive maintenance, qualification and calibration of your device. For information, offers and contact options, visit our website www.eppendorf.com/epservices.

Eppendorf SE recommends that the device and the associated rotors are serviced by an authorized service technician at least every 12 months. Please note the country-specific regulations.

9.2.1 Emptying the drain tubing

If you frequently perform refrigerated centrifugation runs at high ambient temperatures, empty the drain tubing at correspondingly frequent intervals.

Prerequisites:

- A container for collecting the condensation water is available.

1. Place the container for collecting the condensation water at the open end of the drain tubing.

2. To empty the condensation water from the drain tubing, remove the tube-closing cap.
3. Allow the condensation water to drain into the container via the drain tubing.
4. Place the tube-closing cap back onto the drain tubing.

9.2.2 Checking the device

1. Check the device, power cord, and motor shaft for visible damage.
   If the device is damaged, take it out of service.
   Contact an authorized service technician.
2. Check the rotor chamber for corrosion.
   If corrosion is found in the rotor chamber, contact an authorized service technician.

9.2.3 Checking the rotor and accessories

1. Check the rotors and accessories for damage.
   Take damaged rotors and damaged accessories out of operation.
2. Check the service life of the rotors and the accessories.
   Replace rotors and accessories that have exceeded their service life.

9.2.4 Retrieving rotor duty cycles

To retrieve the duty cycles for each rotor, proceed as follows:

1. Tap *Main Menu* > *Device Health* > *Rotors* > *Rotor*.
   A list of the rotors used to date appears.
2. Tap the relevant rotor for which you want to view information.
   A list of parameters for the rotor appears, including the duty cycles.

9.2.5 Replacing the sealing ring on caps

The cap is only aerosol-tight if the sealing ring is seated correctly.

Material:
- Distilled water
- Cloth
- Pivot grease

Prerequisites:
- A new sealing ring is available.

1. Open the bucket and remove the cap from the bucket.
2. Use the paperclip to pry the sealing ring out of the groove.
3. Position the new sealing ring on the groove.

4. Press the sealing ring into the groove.

   The sealing ring must not protrude from the groove at any point.
5. Lightly coat the groove with pivot grease.
6. Place the cap on the bucket and close the bucket.
7. Check that the sealing ring is correctly seated.

9.2.6 Software update

Performing a software update via the Internet

Prerequisites:

- An Internet connection is available.
- The green notification bar indicates a software update.
- The device is not performing a centrifugation run.

1. Tap *Main Menu* > *Configuration* > *Software*.
2. Tap the *Show Update* button.
3. Download and install the update.

   If installation was successful, the device will restart.

Performing a software update using a USB stick

Prerequisites:

- A USB stick with the software update is available.
- There is no critical message.

1. Insert the USB stick into the USB interface.
2. Follow the instructions on the display.
3. Install the update.

   If installation was successful, the device will restart.

9.3 Cleaning

Before using any cleaning or decontamination methods except those recommended by the manufacturer, users should check with the manufacturer that the proposed method will not damage the equipment (source: IEC 61010-2-020, in the current version).

9.3.1 Cleaning the device after glass breakage

Tiny glass particles can become embedded in rubber parts, e.g., in motor sleeves, seals, and rubber mats, and have a sandblasting effect. Clean these parts and the inside of the device very carefully.

WARNING! Contamination

Biological substances may escape from broken vessels. Persons who come into contact with these substances may suffer harm to their health.

– Wear your personal protective equipment.
– If necessary, perform a decontamination before cleaning.

Material:
- Water
- Cloth

Prerequisites:
- The device is disconnected from the power supply.
- The rotor and the accessories have been removed.

1. Remove all vessel fragments.
2. Clean the rotor chamber with damp cloths.
3. Allow the device to dry with the lid open.

9.3.2 Cleaning a fixed-angle rotor after vessel breakage

Clean the rotor by hand.

Do not submerge the rotor under water. When submerged, liquid can enter the gaps of the rotor.

Very small glass particles can deposit in adapters and parts made of rubber, e. g., seals. Clean these parts very carefully.

WARNING! Contamination

Biological substances may escape from broken vessels. Persons who come into contact with these substances may suffer harm to their health.

– Wear your personal protective equipment.
– If necessary, perform a decontamination before cleaning.

Protective equipment:
- Laboratory protective clothing
- Cut-resistant gloves

Material:
- Water
- Soap-based cleaning agent
- Cloth

1. Remove all glass splinters.
2. Remove the rotor and the accessories.
3. To remove any shards from tubes, clean the rotor, the rotor bores and the accessories with a damp cloth.

4. Replace the adapters to prevent any further damage.
5. Allow the rotor and the accessories to dry.

Cleaning can dry out the seal areas on the rotor. This can result in sluggish rotor lid operation. If this is the case, lightly grease the seal with the supplied pivot grease.

9.3.3 Cleaning accessories

Protective equipment:
- Laboratory protective clothing

Material:
- Water
- Distilled water
- Soap-based cleaning agent
- Cloth

Prerequisites:
- The accessories have been removed from the device.
- The accessories have been disinfected.

1. Moisten the cloth with water and cleaning agent.
2. Clean the accessories.
3. Rinse the accessories with purified water.
4. Place the accessories on a cloth to dry.

9.3.4 Cleaning the touch screen

Protective equipment:
- Laboratory protective clothing

Material:
- Water
- Soap-based cleaning agent
- Cloth

Prerequisites:
- The device is switched off.

1. Wet a cloth with water and cleaning agent.
2. Clean the touch screen with the damp cloth.
3. Dry the touch screen with a cloth.

9.4 Decontamination

Before using any cleaning or decontamination methods except those recommended by the manufacturer, users should check with the manufacturer that the proposed method will not damage the equipment (source: IEC 61010-2-020, in the current version).

9.4.1 Decontaminating the device



DANGER! Electric shock

If you touch any parts which are under voltage, you may experience an electric shock. Electric shocks cause heart injury and respiratory paralysis.

– Switch off the device and disconnect the power plug before commencing work on the device.



NOTICE! Component damage

If disinfectant gets inside the device, it can cause electronic components to corrode. This will impair the function of the device.

– Only spray disinfectant onto a cloth.

Protective equipment:

- Laboratory protective clothing
- Laboratory gloves

Material:

- Disinfectant with at least 70 % ethanol
- Deionized water
- Cloth

Prerequisites:

- The device is switched off.
- The device is disconnected from the power line.
- If the device is permanently connected to the power supply, the circuit breaker is switched off.
- The device has been defrosted.

1. Moisten the cloth with disinfectant.
2. Wipe out the rotor chamber of the device with the cloth.
3. Allow the disinfectant to take effect.
4. Wipe off the disinfectant using deionized water.
5. Allow the device to dry with the lid open.

9.5 Care instructions

- Leave the lid open if the device is not in use for an extended period of time.
- Remove the condensation water from the rotor chamber.
- Remove the rotor at least once a month.

10 Troubleshooting

10.1 General errors

Error description	Cause	Solution
No display	Power outage	Check: • The laboratory's power fuse
	The device is not receiving power.	Check: • The device fuses • The power cord
The device lid cannot be opened.	The rotor is rotating.	Wait until the rotor stops. Then open the device lid.
	Power outage	Check: • The position of the power switch • The laboratory's power fuse Open the centrifuge lid using the emergency release.
	The centrifuge lid is blocked.	Remove all objects between the device and lid. Remove all objects on and above the centrifuge lid.
The device does not start.	The device lid is open.	Close the device lid.
The device shakes during acceleration and switches off.	The rotor is loaded asymmetrically.	Wait until the rotor stops. Load the rotor symmetrically. Start centrifugation again. Check that the location meets the requirements.
The temperature display flashes.	The device has not reached the set temperature. The difference between the actual temperature and the set temperature is > 3 °C.	Check: • The set temperature Wait until the device reaches the set temperature. Switch off the device. Let the device cool down for at least 15 min. Ensure that air is circulating freely through the ventilation gaps. If necessary, remove any ice from the rotor chamber.

Error description	Cause	Solution
There is black metal debris in the rotor chamber.	The vessels in the rotor are too long.	Clean the device. Use vessels that are suitable for the rotor.
	The permissible speed of the vessels has been exceeded.	Clean the device. Use vessels that are approved for the required speed.
There is ice in the rotor chamber.	The humidity in the rotor chamber is too high and the minimum temperature is too low.	Perform a temperature control run at approx. 30 °C. Wipe up the condensation water with an absorbent cloth. Leave the device with the lid open.
The display shows the last detected rotor, which differs from the current rotor, and centrifugation cannot be started.	The rotor is not detected by rotor detection.	If the device does not detect the rotor, remove the rotor from the motor shaft. Reinsert it and turn the rotor. If other rotors are not detected, contact an authorized service technician.
The centrifuge is not connected to the VisioNize Lab Suite.	The centrifuge is not connected to the network.	Plug in the LAN cable.

If you are unable to resolve the error using the suggested measures, contact your local Eppendorf partner. You can find their contact information online at www.eppendorf.com.

10.2 Message concept

A message describes a situation in the device that deviates from normal operation and has a starting point and an end point. As long as the message is present, it is counted in the notification bar under the message symbol and shown on the display. When a message occurs, it is displayed in the notification bar. If the message requires confirmation, it will continue to be displayed and counted in the status bar even after the associated situation has ended.

The following table lists examples of messages in the notification bar according to their type:

Message type	Message in the notification bar
Notification	
Warning	

Message type	Message in the notification bar
Error	
Critical, action required	

10.3 Viewing a message

Prerequisites:

- The notification bar displays a message.

1. To view the complete message, tap the message in the notification bar.

Alternatively, tap *Issues*. Select the desired message.

10.4 Snoozing a message signal tone

Not every message triggers a signal tone.

1. Under *Issues*, tap the *Snooze* button.

   The corresponding notification bar disappears.

   The signal tone will sound again in 10 min.

Alternatively, tap the *Snooze* icon in the notification bar.

10.5 Stopping the signal tone of a message

Prerequisites:

- The signal tone of a message is sounding.

1. To stop the signal tone of a message without requiring confirmation, tap the *Stop* button under *Issues*.

   The notification bar for the message disappears.

Alternatively, tap the *Stop* icon in the notification bar.

10.6 Confirming a message

Prerequisites:

- You have the necessary user rights.
- The signal tone of a message is sounding.

1. To stop the signal tone of a message requiring confirmation and to confirm the message, tap the *Stop & Acknowledge* button under *Issues*.

   The notification bar for the message disappears.

Alternatively, tap the *Confirm* icon in the notification bar.

10.7 Reacting to cyber attacks

If a cyber attack has taken place or a malware inspection is suspected, proceed as follows:

1. Disconnect the device from the network connection immediately.
2. In order to allow for a problem analysis to take place, do not turn off the device.
3. Remove the rotor.
4. Attach a sticker or label to the device warning against reuse.
5. Inform the internal IT department and Eppendorf Service about the suspected cyber attack.

10.8 Emergency release of the device lid

If the device lid cannot be opened during a power outage, you can manually activate the emergency release.

Only use the emergency release in an emergency.

DANGER! Electric shock

Touching parts under voltage may cause an electric shock. Electric shocks cause heart injury and respiratory paralysis.

– Do not touch any live parts.

WARNING! Hand injury

If the emergency release of the lid is used, the rotor may continue to rotate. Reaching into the rotor chamber while the rotor is still rotating may cause hand injuries.

– Wait for the rotor to stop moving.
– Grasp the rotor or reach into the rotor chamber only after this.

Tool:

- Rotor key

Prerequisites:

- You have successfully completed training on the emergency release procedure.
- The rotor is stationary.
- The device is disconnected from the power supply.

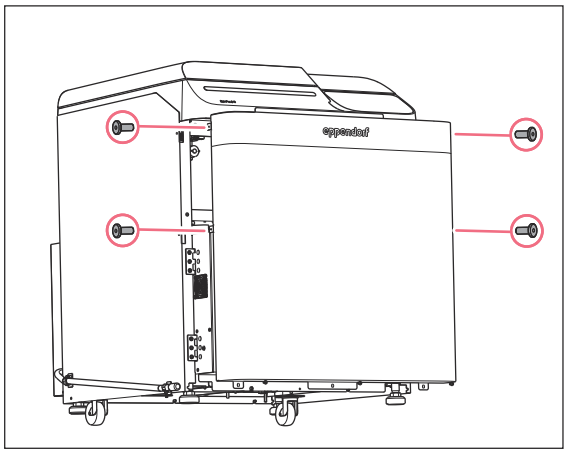

1. Loosen and remove the 3 mounting screws on the bottom edge of the front panel using a cross-head screwdriver.
2. Loosen and remove the 4 mounting screws on both sides of the front panel using a screw wrench.

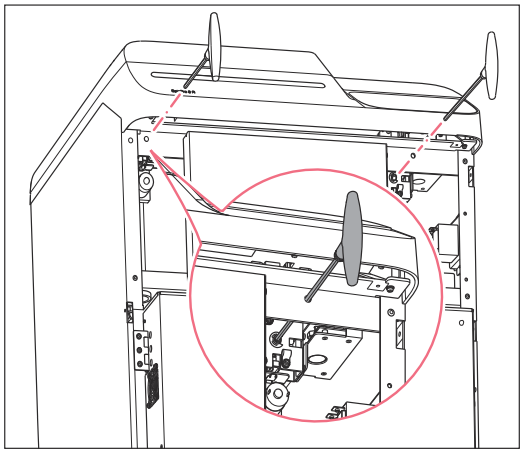

3. Remove the front panel.
4. Insert the unlocking tool into the emergency release opening.
5. Turn the unlocking tool 180 ° to align the markings.
6. Repeat steps 4 and 5 at the other corner of the device.

   The device lid is now unlocked.
7. Open the device lid.
8. Remove the unlocking tool.
9. Reattach the front panel by installing the 4 mounting screws on the sides.

10. Secure the front panel by installing the 3 mounting screws on the bottom edge of the device.

10.9 Troubleshooting technical errors

Prerequisites:

- The device is switched off.

1. Check the cable connections.
2. Switch the device back on after 10 s.

10.10 Accessing service information

In this area, you can access device information for communication with the authorized service.

1. Tap on *Menu* > *Contact & Support* > *Diagnostics* > *Service Information*.
2. Pass the information on to the authorized service.

11 Shut down

11.1 Disconnecting the device from the power supply

Prerequisites:

- The device is switched off.

1. Unplug the power plug from the power socket. If the device is permanently connected to the power supply, switch off the corresponding circuit breaker.

12 Transport

12.1 Preparing the device for transport

Prerequisites:

- The device is out of operation.

1. Remove the rotor from the device.
2. Close the device lid.

12.2 Transporting the device

To transport the device, contact your authorized service technician.



WARNING! Personal injury

The device is heavy. Improper lifting and moving of the device can lead to injury.

– At least two people are required to transport the device.
– Use a suitable transport aid to move the device.

Protective equipment:

- Safety shoes

Material:

- Transport aid

Prerequisites:

- A sufficient number of personnel is available to assist with transport.
- The location meets the specified requirements.

1. Secure the device to prevent it from rolling away.
2. Transport the device in an upright position. Use a transport aid, such as a pallet truck.
3. Avoid subjecting the device to jolts or vibrations.

12.3 Sending in the device



Use the original packing or suitable and appropriate replacement packing. The device must be adequately protected by the packing during storage, transport and shipment. Eppendorf SE is not liable for damage caused by unsuitable or improper replacement packing.



WARNING! Contamination

Shipping or storing a contaminated device or contaminated accessories may lead to contamination of persons or cause damage to health.

– Decontaminate the device and accessories before shipping or putting them into storage.

Material:

- Packing

Prerequisites:

- The device has been taken out of service.
- The device is decontaminated.

1. Download the decontamination certificate for goods returns from https://www.eppendorf.link/decontamination/.
2. Complete the decontamination certificate.
3. Pack the device.
4. Attach the decontamination certificate securely to the outside of the packing for transport.
5. Send in the device.

13 Storage

13.1 Storing the device

Prerequisites:

- The device is decontaminated.
- The device is protected from environmental influences.

1. Ensure that the storage location meets the permissible environmental conditions.
2. Place the device in its storage location.

13.2 Storing accessories

1. Store rotors with the rotor lid open.
2. Do not store rotors, rotor lids, or accessories in areas exposed to strong UV radiation or high humidity.

14 Disposal

14.1 Legal regulations

Electrical and electronic equipment in EU countries

Electrical and electronic equipment must be disposed of in EU member states in accordance with Directive 2012/19/EU. This directive has been implemented into national law by all EU member states.

Electrical and electronic equipment placed on the market after August 13, 2005, must be specially marked. According to the European standard EN 50419, the following symbol can be used for this marking:



Batteries and rechargeable batteries in EU countries

Batteries and rechargeable batteries must be disposed of in an environmentally sound manner in EU member states in accordance with Regulation (EU) 2023/1542. They must not be disposed of with household waste.

Consumers are required to dispose of used batteries and rechargeable batteries at an authorized collection point.

Table 14-1: Marking on batteries

Symbol	Meaning
	Battery must not be disposed of with household waste.
	Battery contains cadmium. Battery must not be disposed of with household waste.
	Battery contains mercury. Battery must not be disposed of with household waste.
	Battery contains lead. Battery must not be disposed of with household waste.

Non-EU countries

Non-EU countries have country-specific standards for the disposal of waste electrical and electronic equipment and the disposal of batteries and rechargeable batteries.

Notes on disposal of electrical and electronic equipment in the United Kingdom

In the United Kingdom, the disposal of electrical and electronic equipment is governed by national regulations which are based on national legislation from 2013, The Waste Electrical and Electronic Equipment Regulations 2013 (as amended), which apply to these devices.

According to these regulations, any electrical and electronic equipment that was put on the market after August 13, 2005 in the business-to-business sector – which applies to this product – must no longer be disposed of with household waste. They are marked with the following symbol to indicate this:



As the disposal regulations may differ from one country to another, please contact your supplier for more information.

14.2 Preparing for disposal

Preparing for disposal in accordance with legal regulations

Information on the legal regulations applicable in your country can be obtained from your local authority and your Eppendorf partner.

Dispose of non-decontaminated products as hazardous waste.

1. Check which legal regulations apply to disposal in your country.
2. Choose a certified waste disposal company or contact your Eppendorf partner.

Removing batteries and rechargeable batteries

1. Check if your product contains permanently installed batteries or rechargeable batteries.
2. Remove only the batteries and rechargeable batteries that are not permanently installed.
3. Dispose of the removed batteries and rechargeable batteries according to the legal regulations of your country.

Creating a decontamination certificate

Prerequisites:

- The product is decontaminated.

1. Download a decontamination certificate from the website https://www.eppendorf.link/decontamination/.

2. Complete the decontamination certificate.

14.3 Handing over the product to the waste disposal company

1. Inform the waste disposal company of any hazards posed by the product, such as locking mechanisms or flammable substances.
2. Hand over the product and the decontamination certificate to the certified waste disposal company.

15 Technical data

15.1 Dimensions

Device

Width	700 mm
Depth	810 mm
Height with lid closed	908 mm
Height with lid open	1500 mm

Packing

Width	830 mm
Depth	880 mm
Height	1190 mm

15.2 Weight

Device without rotor	265 kg
Packing	45 kg
Packaged device without rotor	310 kg

15.3 Power supply

Power connection	200 V – 240 V ±10 %, 50 Hz / 60 Hz
Current consumption	200 V: 23 A, 208 V: 22 A, 220 V: 21 A, 230 V: 20 A, 240 V: 19 A
Power consumption	200 V – 240 V: 4600 VA
Electromagnetic compatibility Interference emission (radio interference)	The device meets the following requirements: 200 V – 240 V: • IEC 61326-1 • CISPR 11 • DIN EN 61326-1 • DIN EN 55011 – Class A
Electromagnetic compatibility Noise immunity	The device meets the following requirements: • IEC 61326-1 / DIN EN 61326-1 Industrial electromagnetic environment

Protection class	I
Overvoltage category	II
Pollution degree	2
Certified power cord	600 V AWG 10 STO, 4.1 m (3.3 m of which is outside the device)
Circuit breaker (not included in the scope of delivery)	30 A

15.4 Refrigeration system

Refrigerant	R744 (850 g)
Pressure value - low	9.4 MPa
Pressure value - high	12 MPa

15.5 Ambient conditions

Operation

Environment	Indoor use only
Ambient temperature	2 °C – 40 °C
Guaranteed operating temperature range	15 °C – 25 °C
Relative humidity	20 % – 90 %, non-condensing
Atmospheric pressure	79.5 kPa – 106 kPa Use up to an altitude of 2 000 m above sea level.

Transport

	General transport	**Air freight**
Air temperature	-40 °C – 60 °C	-40 °C – 60 °C
Relative humidity	max. 80 % at temperatures up to 31 °C, max. 50 % at temperatures up to 40 °C, non-condensing	max. 80 % at temperatures up to 31 °C, max. 50 % at temperatures up to 40 °C, non-condensing
Atmospheric pressure	79.5 kPa – 106 kPa	79.5 kPa – 106 kPa

Storage

	In transport packing	Without transport packing
Air temperature	-25 °C – 55 °C	-5 °C – 45 °C
Relative humidity	10 % – 95 %	10 % – 95 %
Atmospheric pressure	70 kPa – 106 kPa	70 kPa – 106 kPa

15.6 Interfaces

USB interface	USB 2.0, type A
Ethernet interface	100 MB/s

15.7 Noise level

Device	64 dB(A)

15.8 Temperature

Rotor	Temperature at maximum rotational speed	rpm for safely maintaining 4 °C ±2 °C
R27A	15 °C ±2 °C	20600 rpm
R10S	4 °C ±2 °C	10000 rpm
R9A2	4 °C ±2 °C	8500 rpm
R15A	4 °C ±2 °C	15000 rpm
R10A3	4 °C ±2 °C	10000 rpm

15.9 Acceleration and deceleration times

Acceleration and deceleration times were measured with the rotor at maximum load. For swing-bucket rotors, the values were determined using round buckets. Deviations are possible depending on the condition of the device and the load.

You can set the acceleration and deceleration ramp levels from 0 to 9. The acceleration and deceleration times are determined by the selected level.

- Level 9: shortest acceleration time/deceleration time

Rotor	Speed		Level 9
R9A2	8500 rpm	Acceleration time	≤212 s
		Deceleration time	≤203 s
R27A	22000 rpm	Acceleration time	≤234 s
		Deceleration time	≤91 s

Rotor	Speed		Level 9
R10S	10000 rpm	Acceleration time	≤62 s
		Deceleration time	≤44 s
R15A	15000 rpm	Acceleration time	≤124 s
		Deceleration time	≤94 s
R10A3	10000 rpm	Acceleration time	≤147 s
		Deceleration time	≤129 s

15.10 Application parameters

Run time	1 s – 99:59 h, infinite (∞) Adjustable in increments of 1 s
Temperature	-20 °C – 40 °C
Relative centrifugal force	1 × g – 58700 × g Adjustable in increments of 1 g
Speed	300 rpm – 22000 rpm Adjustable in increments of 1 rpm
Maximum load	Fixed-angle rotor: 6 × 1000 mL, 4 × 1500 mL Swing-bucket rotor: 4 × 730 mL
Maximum kinetic energy	164 000 J
Permissible density of the material for centrifuging at maximum speed and maximum load	1.2 g/mL
Testing required in Germany	Yes

16 Suitable rotors

Eppendorf SE centrifuges can only be operated with rotors designed for the device. Further information on rotors can be found at www.eppendorf.com

Observe the manufacturer's specifications regarding the centrifugation stability of the sample vessels (maximum *g*-force).

16.1 Overview of suitable rotors

- R5A
- R5SS3
- R10A3
- R9A2
- R15A
- R20A2
- R9A
- R12A3
- R13A
- R22A4
- R10A5
- R4SS
- R3S
- R18A
- R12A6
- R14A
- R22A6
- R27A
- R5S4
- R21A2
- R21A
- R10H
- R8S
- R11D2
- R14A3
- R19A
- R6S
- R10S
- R18AY
- R8AY

17 Chemical resistance

17.1 Evaluation criteria for chemical resistance

Marking	Resistance	Explanations
■■■	Resistant	The chemical can be used.
■■	Conditionally resistant	The chemical may cause surface discoloration.
■	Not resistant	The chemical may cause severe discoloration or surface damage. The chemical must be used with great caution.
N/A	–	The chemical has not been tested.

17.2 Chemical resistance of the faceplate

Table 17-1: Acids and alkalis

Designation	Concentration	White faceplate	Silver faceplate
Ammonia solution	25 %	■■■	■■
Ammonia solution	2 %	■■■	■■
Acetic acid	96 %	■■	■■
Acetic acid	12 %	■■■	■■■
Sodium hydroxide	20 %	■■■	■■
Sodium hydroxide	4 %	■■■	■■
Perchloric acid	10 %	■■■	■
Nitric acid	65 %	■	■
Nitric acid	6.3 %	■	■
Hydrochloric acid	32 %	■■■	■
Hydrochloric acid	3.6 %	■■■	■
Sulfuric acid	96 %	■	■
Sulfuric acid	16 %	■■■	■
Trifluoroacetic acid	40 %	■	■
Trifluoroacetic acid	10 %	■	■

Table 17-2: Organic solvents

Designation	Concentration	White faceplate	Silver faceplate
Acetone	≥ 99.8%	■■	■■■
Acetonitrile	≥ 99.9%	■■	■■■
Petroleum ether	N/A	■■■	■■■
Chloroform	N/A	■■	■■
Dichloromethane (methylene chloride)	≥ 99.5%	■■	■■
Diethyl ether	≥ 99%	■■■	■■■
DMSO	10 %	■■	■■
DMSO	50 %	■■	■■
DMSO	100 %	■■	■■
Acetic acid ethyl ester	≥ 99.5%	■■	■■■
Ethanol (denatured)	96 %	■■■	■■■
Formaldehyde	37 %	■	■■■
Isoamyl alcohol	≥ 98%	■■■	■■■
Isopropanol	≥ 99.8%	■■■	■■■
Methanol	≥ 99.9%	■■■	■■■
Phenol	N/A	■	■
Toluol	N/A	■■■	■■■

Table 17-3: Cleaning agents and disinfectants

Designation	Concentration	White faceplate	Silver faceplate
Biocidal ZF	N/A	■■■	■■■
COUNT-OFF Liquid Concentrate	2 %	■■■	■■■
COUNT-OFF Surface Cleaner	N/A	■■	■■
Dismozon pur (peroxide-based)	4 %	■■■	■■■
DNA *AWAY*	N/A	■■■	■■■
DNA-ExitusPlus	N/A	■■■	■■■
Formaldehyde	6 %	■■■	■■■
Helipur (phenol-based)	6 %	■	■

Designation	Concentration	White faceplate	Silver faceplate
Hexaquart S (quaternary ammonium compounds)	5 %	■■	■■■
Korsolex basic (aldehyde-based)	5 %	■■	■
Meliseptol (alcohol-based)	N/A	■■■	■■■
Sodium hypochlorite	10 %	■■■	■■■
Sodium hypochlorite	6 %	■■	■■
RNase AWAY	N/A	■■■	■■■
RNase-ExitusPlus	N/A	■	■■
Hydrogen peroxide	35 %	■■■	■■
Hydrogen peroxide	6 %	■	■■■
Spor-Klenz	N/A	■■■	■■■
Incidin Plus	3 %	■■	■■
CaviCide	N/A	■■	■■■
Ethanol	70 %	■■■	■■■
Isopropyl (alcohol-based)	70 %	■■■	■■■
Descoton Forte	5 %	■■	■■■
Rheosept	N/A	■■■	■■■
Medichem ID Kombi	3 %	■■	■■■
Sekusept Plus	1.5 %	■■	■■■
Klercide Sporicidal Low Residue Peroxide	N/A	■■■	■■■
Klercide Low Residue Quat Unit Dose Concentrate	1:49	■■■	■■■
ClearKlens Cleansinald (SC), VH9	0.5 %	■■	■■
ClearKlens Tego 2000 (SC), VH25	1 %	■■■	■■■
ClearKlens Bi-Spore, VH26	1+48+1	■■■	■■■

17.3 Chemical resistance of the centrifuge lid

Table 17-4: Acids and alkalis

Designation	Concentration	Centrifuge lid
Ammonia solution	25 %	■■■
Ammonia solution	2 %	■■■
Acetic acid	96 %	■■■
Acetic acid	12 %	■■■
Sodium hydroxide	20 %	■■■
Sodium hydroxide	4 %	■■■
Perchloric acid	10 %	■■
Nitric acid	65 %	■■■
Nitric acid	6.3 %	■
Hydrochloric acid	32 %	■■■
Hydrochloric acid	3.6 %	■■
Sulfuric acid	96 %	■■
Sulfuric acid	16 %	■
Trifluoroacetic acid	40 %	■■
Trifluoroacetic acid	10 %	■■■

Table 17-5: Organic solvents

Designation	Concentration	Centrifuge lid
Acetone	≥ 99.8%	■
Acetonitrile	≥ 99.9%	■
Petroleum ether	N/A	■■■
Chloroform	N/A	■
Dichloromethane (methylene chloride)	≥ 99.5%	■
Diethyl ether	≥ 99%	■■■
DMSO	10 %	■
DMSO	50 %	■■■
DMSO	100 %	■■
Acetic acid ethyl ester	≥ 99.5%	■

Designation	Concentration	Centrifuge lid
Ethanol (denatured)	96 %	■■■
Formaldehyde	37 %	■■■
Isoamyl alcohol	≥ 98%	■■■
Isopropyl alcohol	≥ 99.8%	■■■
Methanol	≥ 100%	■■■
Phenol (hydrogen-saturated)	N/A	■
Toluol	N/A	■

Table 17-6: Cleaning agents and disinfectants

Designation	Concentration	Centrifuge lid
Biocidal ZF	N/A	■■■
COUNT-OFF Liquid Concentrate	2 %	■■■
COUNT-OFF Surface Cleaner	N/A	■■■
Dismozon pur (peroxide-based)	4 %	■■■
DNA *AWAY*	N/A	■■■
DNA-ExitusPlus	N/A	■■■
Formaldehyde	6 %	■■■
Helipur	6 %	■■■
Hexaquart S (quaternary ammonium compounds)	5 %	■■■
Korsolex basic (aldehyde-based)	5 %	■■■
Meliseptol (alcohol-based)	N/A	■■■
Sodium hypochlorite	10 %	■■■
Sodium hypochlorite	6 %	■■■
RNase AWAY	N/A	■■■
RNase-ExitusPlus	N/A	■■■
Hydrogen peroxide	35 %	■■■
Hydrogen peroxide	6 %	■■■
Spor-Klenz	N/A	■■
Incidin Plus	3 %	■■■
CaviCide	N/A	■■■

Designation	Concentration	Centrifuge lid
Ethanol	70 %	■■■
Isopropyl (alcohol-based)	70 %	■■■
Descoton Forte	5 %	■■■
Rheosept	N/A	■■■
Medichem ID Kombi	3 %	■■■
Sekusept Plus	1.5 %	■■■
Klercide Sporicidal Low Residue Peroxide	N/A	■■■
Klercide Low Residue Quat Concentrate	2 %	■■■
ClearKlens Cleansinald (SC), VH9	0.5 %	■■■
ClearKlens Tego 2000 (SC), VH25	1 %	■■■
ClearKlens Bi-Spore, VH26	N/A	■■■

17.4 Chemical resistance of the housing rubber mat

Table 17-7: Acids and alkalis

Designation	Concentration	Housing rubber mat
Ammonia solution	25 %	■■
Ammonia solution	2 %	■■
Acetic acid	96 %	■■
Acetic acid	12 %	■■
Sodium hydroxide	20 %	■
Sodium hydroxide	4 %	■
Perchloric acid	10 %	■
Nitric acid	65 %	■
Nitric acid	6.3 %	■
Hydrochloric acid	32 %	■
Hydrochloric acid	3.6 %	■■■
Sulfuric acid	96 %	■
Sulfuric acid	16 %	■
Trifluoroacetic acid	40 %	■

Designation	Concentration	Housing rubber mat
Trifluoroacetic acid	10 %	■■

Table 17-8: Organic solvents

Designation	Concentration	Housing rubber mat
Acetone	≥ 99.7 %	■■■
Acetonitrile	≥ 99.9%	■■■
Petroleum ether	N/A	■■■
Chloroform	≥ 99%	■■
Dichloromethane (methylene chloride)	≥ 99.5%	■■
Diethyl ether	≥ 99.5%	■■■
DMSO	10 %	■■■
DMSO	50 %	■■■
DMSO	100 %	■■■
Acetic acid ethyl ester	≥ 99.5%	■■■
Ethanol (denatured)	96 %	■■
Formaldehyde	37 %	■■■
Isoamyl alcohol	≥ 98.5 %	■■
Isopropyl alcohol	≥ 99.5%	■■■
Methanol	≥ 99.98 %	■■■
Phenol	N/A	■■
Toluol	N/A	■■■

Table 17-9: Cleaning agents and disinfectants

Designation	Concentration	Housing rubber mat
Biocidal ZF	N/A	■■■
COUNT-OFF Liquid Concentrate	2 %	■■■
COUNT-OFF Surface Cleaner	N/A	■■
Dismozon pur (peroxide-based)	4 %	■■■
DNA *AWAY*	N/A	■■■
DNA-ExitusPlus	N/A	■■■
Formaldehyde	6 %	■■■

Designation	Concentration	Housing rubber mat
Helipur	6 %	■
Hexaquart S (quaternary ammonium compounds)	5 %	■■■
Korsolex basic (aldehyde-based)	5 %	■
Meliseptol (alcohol-based)	N/A	■■■
Sodium hypochlorite	10 %	■■■
Sodium hypochlorite	6 %	■■
RNase AWAY	N/A	■■■
RNase-ExitusPlus	N/A	■■
Hydrogen peroxide	35 %	■■
Hydrogen peroxide	6 %	■■■
Spor-Klenz	N/A	■■■
Incidin Plus	3 %	■■
CaviCide	N/A	■■■
Ethanol	70 %	■■■
Isopropyl (alcohol-based)	70 %	■■■
Descoton Forte	5 %	■■■
Rheosept	N/A	■■■
Medichem ID Kombi	3 %	■■■
Sekusept Plus	1.5 %	■■■
Klercide Sporicidal Low Residue Peroxide	N/A	■■■
Klercide Low Residue Quat Concentrate	2 %	■■■
ClearKlens Cleansinald (SC), VH9	0.5 %	■■
ClearKlens Tego 2000 (SC), VH25	1 %	■■■
ClearKlens Bi-Spore, VH26	N/A	■■■

17.5 Chemical resistance of the upper part of housing

Table 17-10: Acids and alkalis

Designation	Concentration	Upper part of housing
Ammonia solution	25 %	■■

Designation	Concentration	Upper part of housing
Acetic acid	96 %	■■
Sodium hydroxide	20 %	■
Perchloric acid	10 %	■■■
Nitric acid	65 %	■■
Nitric acid	6.3 %	■■
Hydrochloric acid	32 %	■■■
Sulfuric acid	96 %	■
Sulfuric acid	16 %	■■■
Trifluoroacetic acid	40 %	■
Trifluoroacetic acid	10 %	■■■

Table 17-11: Organic solvents

Designation	Concentration	Upper part of housing
Acetonitrile	≥ 99.9%	■
Petroleum ether	N/A	■■■
Dichloromethane (methylene chloride)	≥ 99.5%	■
Diethyl ether	≥ 99%	■■■
DMSO	50 %	■■■
DMSO	100 %	■
Ethyl acetate	≥ 99.5%	■
Methanol	100 %	■■■

Table 17-12: Various cleaning agents

Designation	Concentration	Upper part of housing
Cesium chloride	1.86 g/mL	■■■
Ficoll	1.077 g/mL	■
Glutaraldehyde	25 %	■■
Guanidinium thiocyanate	4 M	■■■
TRIS buffer (pH value 7.5)	1 M	■■
Guanidine hydrochloride	6 M	■■■

18 Glossary

Autoclaving

Physical method of sterilization. Thermal process used to kill microorganisms and inactivate viruses and enzymes. This process does not completely destroy the DNA. The objects to be autoclaved are stored in a pressure vessel with water vapor at 121 °C, 1000 hPa (1 bar) positive pressure for 20 min.

CE

Conformité Européenne – The CE marking indicates that a product has been assessed before reaching the market and is deemed to meet EU safety, health and/or environmental protection requirements.

Centrifugation cycle

Each run during which the rotor is accelerated and braked again. A cycle is independent of the speed and the duration of the centrifugation run.

Certificate, digital

Data record with which a digital signature is assigned to the identity of a person, organization or system.

Deepwell plate

Plate with 48, 96, or 384 wells with larger volumes than microplates. Suitable for preparing, mixing, centrifuging, transporting and storing solid and liquid samples.

DHCP

Dynamic Host Configuration Protocol - DHCP is a network protocol that automatically provides clients in a TCP/IP network with configuration data such as IP addresses, network masks, gateway addresses and DNS server addresses.

Events

Software function that records event logs.

***g*-force**

Indicates the acceleration during centrifugation, which is calculated from the rotational speed and the radius of the rotor bowl.

IP

Internet Protocol – Network protocol that controls the transfer of data packets between computers and other devices in a network.

JSON-RPC

JavaScript Object Notation Remote Procedure Call – JSON-RPC is a simple, platform-independent protocol that facilitates the easy application and transfer of data through the use of JSON. It is often used for communication between web applications and servers or in distributed systems.

LAN

Local Area Network – A local area network (LAN) that connects digital terminal equipment such as computers, servers, printers and other network devices within a restricted area such as a building or data center. It comprises at least two terminal devices, however can also comprise several thousand.

Microplate

A microplate is a laboratory consumable. Microplates contain wells insulated from each other in rows and columns. The exact dimensions of the plate are set in the ANSI standard on the recommendation of the Society for Biomolecular Screening. Microplates contain 24, 48, 96, or 384 wells for preparing, mixing, centrifuging, transporting and storing solid and liquid samples.

NTP

Network Time Protocol – Network protocol for time synchronization of computer systems across networks such as the Internet.

PCR

Polymerase Chain Reaction - A polymerase chain reaction refers to methods for the in vitro multiplication of genetic material (deoxyribonucleic acid). Depending on the method applied, various forms of the DNA polymerase enzyme are used. The use of "chain reaction" here refers to the use of products from previous cycles as starting material for the next cycles, therefore facilitating an exponential replication. With the classic PCR, these cycles are controlled via a temperature program. With the further development of isothermal DNA amplification, this replication takes place continuously at a constant temperature.

Ramp

The curve showing the change in speed after the centrifuge accelerates or decelerates the rotor, which determines the resulting acceleration and deceleration times.

rcf

relative centrifugal force – The relative centrifugal force is expressed as a multiple of the acceleration due to gravity in “g” and depends on the rotational speed and the rotor radius.

Residual current circuit breaker

Protective device that disconnects the voltage when there is a dangerously high rated residual current flowing to ground. Residual current circuit breakers protect persons from electric shock.

rpm

revolutions per minute – Mechanical unit of rotational speed, which gives the number of complete revolutions during a period of 60 s.

Status display

Word or symbol in the graphical user interface showing the status of a device or a connected module or component.

Status light bar

The current status of the device is indicated by the color and operation of an elongated status light bar.

Vessel

Micro test tube or individual well in a plate.

VisioNize

System for laboratory monitoring offered by Eppendorf SE, providing services related to Eppendorf devices.

Well

Cavity in a micro plate, PCR plate, deepwell plate, cell-imaging slide, and cell-imaging coverglass.

19 Index

A

Accessories
Checking 58
Cleaning accessories 61
Authorized service 68
Authorized service technician 13

C

Cap
Replacing the sealing ring 58
Centrifuge lid
close 42
Cleaning the accessories
Cleaning accessories 61
Cleaning the device
Removing glass fragments 59

D

Data loss 12
Decontamination certificate 70
Device
Checking the device 58
Use 9

E

Errors
general 63

M

Manual
Symbols 8
Material damage
Data loss 12

O

Owner 13
Profile 13

P

Packing
Original packing 70
Replacement packing 70
Protective clothing 14

R

Reinigung des Rotors nach Gefäßbruch
Festwinkelrotor 60
Rotor
Checking 58
Replacing the rotor 43
Rotor nach Gefäßbruch reinigen
Festwinkelrotor 60

S

Safety
Protective clothing 14
Warning notice structure 7
Sealing ring
Replacing the sealing ring 58
Symbols on the device 22

T

Technical personnel 13

U

User 13

W

Warning notice
Structure 7

Evaluate Your Manual

Give us your feedback.
www.eppendorf.com/manualfeedback

Your local distributor: www.eppendorf.com/contact
Eppendorf SE · Barkhausenweg 1 · 22339 Hamburg · Germany
eppendorf@eppendorf.com · www.eppendorf.com